CITY OF JACKSON

IMPROVEMENT STANDARDS

RESOLUTION NO. _____

April 2012

TABLE OF CONTENTS

1.00 PURPOSE AND INTENT **1**

2.00 GENERAL REQUIREMENTS **3**

2.01 PLANS AND SPECIFICATIONS REQUIRED 3
2.02 STANDARD SPECIFICATIONS 3
2.03 PLAN SUBMITTAL 3
2.04 CHANGE IN PLANS DURING CONSTRUCTION 4
2.05 CONTRACTOR AND DEVELOPER RESPONSIBILITY 4
2.06 MAINTENANCE GUARANTEE 4

3.00 CONSTRUCTION STAKING **5**

3.01 SCOPE 5
3.02 CONTROL STAKES 5
3.03 REQUIRED STAKING 5
3.04 CONSTRUCTION STAKE CHECKING 7
3.05 CONSTRUCTION STAKING 7
3.06 LINES AND GRADES 7
3.07 UTILITIES 7

4.00 RESERVED **8**

5.00 PLAN DETAILS **9**

5.01 GENERAL 9
5.02 PLAN CONTENT REQUIREMENTS 9
5.03 PLAN FORMAT REQUIREMENTS 11
5.04 ADDITIONAL IMPROVEMENTS TO BE SHOWN 11
5.05 SIGN AND STRIPING PLAN 12
5.06 COMPLIANCE 12

6.00 INSPECTION DURING CONSTRUCTION **13**

6.01 GENERAL 13
6.02 NOTIFICATION 13
6.03 COMPLIANCE AND RESPONSIBILITY 13
6.04 INSPECTION FEES 13
6.05 INSPECTION DEPOSIT 13

7.00 FINAL INSPECTION **15**

7.01 CLEAN UP 15
7.02 CITY ENGINEER INSPECTION 15

8.00 "AS-BUILT" PLAN **15**

8.01 "AS-BUILT" PLAN REQUIREMENTS 15

9.00 IMPROVEMENT AGREEMENTS AND SECURITY **16**

9.01 IMPROVEMENT AGREEMENT 16
9.02 IMPROVEMENT AGREEMENT SECURITY 16
9.03 TERMINATION 16
9.04 DEPOSITS AND CERTIFICATES 16
9.05 LETTER OF CREDIT 17
9.06 PERFORMANCE AND LABOR/MATERIALS BOND 17
9.07 SECURITY RELEASE 17
9.08 TIME EXTENSION 17

10.00 DESIGN STANDARDS - STREETS **18**

10.01 General 18
10.02 Street Classifications 18
10.03 Grades, Cross Slope, and Intersections 18
10.04 Design Speed 19
10.05 Geometric and Structural Sections 19
10.06 Testing of Materials 22
10.07 Right of Way 22
10.08 Signing and Barricades 22

11.00 DESIGN STANDARDS - STORM DRAINAGE 23

11.01 General 23
11.02 Classification of Storm Drains 23
11.03 Alignment 24
11.04 Lines 24
11.05 Easements 24
11.06 Natural Drainage Courses 24
11.07 Drainage Study 25
11.08 Drainage Plan 25
11.09 Calculations 25
11.10 Closed Storm Drain Systems 26
11.11 Open Channels 26
11.12 Drainage Structures 27

12.00 DESIGN STANDARDS - SANITARY SEWER 29

12.01 Design Flow 29
12.02 Gradients 29
12.03 Pipe Size 30
12.04 Pipe Strength Class 30
12.05 Location and Alignment 30
12.06 Minimum Depth 30
12.07 Manhole Locations 31
12.08 Cleanouts or Flushing Holes 31
12.09 Stubs for Future Extension 31
12.10 Service Lines 31
12.11 Lift Station and Force Main Design 31

13.00 CONSTRUCTION STANDARDS - STREETS 32

13.01 Lines and Grades 32
13.02 Order of Work 32
13.03 Maintaining Traffic 32
13.04 Construction Area Signs 33
13.05 Traffic Control System for Lane Closure 33
13.06 Obstructions 33
13.07 Adjust Utilities to Grade 34
13.08 Clearing and Grubbing 34
13.09 Asphalt Concrete 34
13.10 Pavement Reinforcing Fabric 34
13.11 Fog Seal Coat 34
13.12 Striping and Pavement Markings 34
13.13 Subsurface Drain 35
13.14 Locate and Protect Existing Utilities 35

14.00 CONSTRUCTION STANDARDS - STREET LIGHTING 36

General 36
14.01 - Materials and Construction 36
14.02 - Foundations 36

14.03 - Electrolier Standards 37
14.04 - Electrolier Arm 37
14.05 - Conduit 37
14.06 - Pull Boxes 38
14.07 - Conductors and Wiring 38
14.08 - Luminaires 39
14.09 - Lamps 39
14.10 - Photoelectric Control 39
14.11 - Service Connection 39

15.00 CONSTRUCTION STANDARDS - STORM DRAIN AND SANITARY SEWER 40

15.01 Sanitary Sewer Pipe 40
15.02 Storm Drain Pipe 40
15.03 Installation 40
15.04 Trenches and Backfill 41
15.05 Pipeline Testing 44
15.06 Tests for Obstructions 45
15.07 Sanitary Sewer Manholes 45
15.08 Connection to Existing Sewer 46
15.09 Sewer Lateral Adjustment to Grade and Sewer Lateral Connection 46
15.10 Concrete Structures 46
15.11 Miscellaneous Iron and Steel 47
15.12 Adjusting Utilities to Grade 47

16.00 STANDARD DETAILS: STREETS, STORMDRAIN, SEWER 48

17.00 GENERAL CONDITIONS, PIPELINE EXTENSION AGREEMENTS: WATER 80

17.01 Release for Construction 80
17.02 Standards 80
17.03 Insurance 80
17.04 Notification 80
17.05 Inspection 80
17.06 Existing Utility Location 81
17.07 Staking 81
17.08 Soils Compaction Testing 81
17.09 Hydrostatic Testing, Chlorination & Flushing 81
17.10 Submittals 81
17.11 Construction Water 82
17.12 As Built Drawings 82
17.13 Acceptance 82

18.00 PLAN REQUIREMENTS: WATER 83

18.01 Water Line Layout Sheet 83
18.02 Easements 83

19.00 DESIGN STANDARDS: WATER 84

19.01 Introduction 84
19.02 Intent of Criteria 84
19.03 Current Standards 84
19.04 Water Supply Pressure 84
19.05 Peak Day Flow 84
19.06 Fire Flow 85
19.07 Distribution System Design 85
19.07.1 Hydraulic Analysis 85
19.07.2 Sizing 85
19.07.3 Material 85

19.07.4 Water Service Piping ... *85*
19.08 DISTRIBUTION SYSTEM LAYOUT REQUIREMENTS ... 85
19.08.1 Water Line Locations and Clearances ... *85*
19.08.2 Service Lines ... *86*
19.08.3 Line Valves ... *86*
19.08.4 Blow-Off Valve ... *87*
19.08.5 Combination Air-Vacuum Release Valve (CAVRV) ... *87*

20.00 CROSS CONNECTION CONTROL: WATER ... 88

20.01 PURPOSE ... 88
20.02 DEFINITIONS ... 88
20.03 CROSS CONNECTION PROTECTION REQUIREMENTS ... 90
20.03.1 General Provisions ... *90*
20.03.2 Where Protection is Required ... *90*
20.03.3 Fire Protection Systems Using Chemicals ... *91*
20.03.4 Type of Protection Required ... *91*
20.03.5 Cross-Connection Control Hazard Assessment ... *92*
20.04 BACKFLOW PREVENTION DEVICES ... 95
20.04.1 Approved Devices ... *95*
20.04.2 Installation ... *95*
20.04.3 Testing and Maintenance ... *95*
20.04.4 Removal ... *95*

21.00 PIPING AND PLUMBING: WATER ... 96

21.01 TREATED WATERLINE PIPING ... 96
21.02 PIPELINE DEPTHS ... 96
21.03 PIPELINE TYPES ... 96
21.03.1 Ductile Iron Pipe ... *96*
21.03.2 Polyvinyl Chloride (PVC) Pressure Pipe ... *98*
21.03.3 Brass or Bronze Pipe & Fittings ... *98*
21.03.4 Galvanized Steel Pipe ... *98*
21.04 TREATED WATER SERVICE PIPING ... 99
21.04.1 Polyethylene Pipe ... *99*
21.04.2 Polyvinyl Chloride (PVC) ... *99*
21.04.3 Ductile Iron Pipe ... *99*
21.05 RESERVED ... 99
21.06 VALVES AND APPURTENANCES ... 100
21.06.1 Gate Valves ... *100*
21.06.2 Butterfly Valves ... *100*
21.06.3 Tapping Valves ... *101*
21.06.4 Tapping Sleeves/Saddles ... *101*
21.06.5 Flanged Gaskets ... *101*
21.06.6 Nuts and Bolts ... *101*
21.06.7 Service Saddles ... *101*
21.06.8 Corporation Stops ... *101*
21.06.9 Plastic Film Wrap ... *102*
21.06.10 Meter Boxes ... *102*
21.06.11 Angle Meter Stops ... *102*
21.06.12 Combination Air and Vacuum Release Valves ... *102*
21.06.13 Control Valves ... *103*
21.06.14 Reserved ... *103*
21.06.15 Ball Valves ... *103*
21.06.16 Globe Valves ... *104*
21.06.17 Solenoid Valves ... *104*
21.06.18 Swing Check Valves ... *104*
21.06.19 Valve Boxes ... *105*

21.06.20 Valve Riser Extensions *105*
21.06.21 Strainers *105*
21.06.22 Pressure Gauges *105*
21.06.23 Locating Cable & Locator Tape *106*
21.06.24 Flexible Couplings *106*
21.06.25 Flanged Coupling Adapters *106*
21.06.26 Rubber Expansion Joints *106*
21.06.27 Fire Hydrants *106*
21.06.28 Sampling Stations *107*
21.07 BACKFLOW DEVICES 107
21.08 INSTALLATION AND TESTING 107
21.08.1 Location of Existing and New Utilities *107*
21.08.2 Quality Control *107*
21.08.3 Laying of Pipe *108*
21.08.4 Bedding and Backfill *108*
21.08.5 Connections to Existing Pipelines *109*
21.08.6 Abandonment of Existing Facilities *110*
21.08.7 Hydrostatic Testing *110*
21.08.8 Disinfection/Chlorination and Flushing *112*
21.08.9 Continuity Testing *113*
21.08.10 Facility markers *113*

22.00 BORING, JACKING AND TUNNELING: WATER 114

22.01 RESERVED 114
22.02 STEEL CASING 114
22.02.1 Outside Diameter Tolerances *114*
22.02.2 Wall Thickness Tolerances *114*
22.02.3 Wall Thickness Minimum *115*
22.02.4 Casing Surface Conditions *115*
22.02.5 Lengths and Ends *116*
22.02.6 Straightness *116*
22.02.7 Welding *116*
22.03 GROUTING 116
22.04 WING CUTTERS/BANDS/FLAIRS 117
22.05 JACKING AND RECEIVING PITS 117
22.06 ALIGNMENT TOLERANCES 117
22.07 ROTARY DRILLING 117
22.08 CASING INSULATORS/SPACERS 117
22.08.1 Band/Shell *118*
22.08.2 Connecting Flanges *118*
22.08.3 Bolts/Studs *118*
22.08.4 Insulating Liner *118*
22.08.5 Skids/Runners *118*
22.09 CARRIER PIPE 118

23.00 STANDARD DETAILS: WATER 119

1.00 PURPOSE AND INTENT

It is the purpose of these Improvement Standards to provide minimum standards to be applied to improvements and private development projects to be dedicated to the public and accepted by the City for maintenance or operation, as well as improvements to be installed within existing rights of way and easements. These standards provide for coordinated development of required facilities to be used by and for the protection of the public. These standards shall apply to and regulate the design and preparation of plans for construction of streets, highways, drainage, sewerage, street lighting, water system facilities and related public improvements.

Water lines shall be sized to meet the fire flow requirements of the Jackson Fire Department and these standards. Fire hydrant location shall be approved by City Fire Chief. For specific fire requirements or specifications contact:

Fire Chief
City of Jackson Volunteer Fire Department
33 Broadway
Jackson, CA 95642
(209) 223-1646

It is not possible to anticipate all situations that arise or to prescribe standards applicable to every development. The intent of these Standards is to assist developers, engineers, and contractors toward completion of improvements that will comply with City requirements and be accepted by City for maintenance and operation. The Planning Commission or City Council may impose project specific requirements which may supercede the requirements and standards set forth herein. Any items or situation not included in these Improvement Standards shall be designed in accordance with accepted engineering practice, the applicable Standard Plans and Standard Specifications of the State of California Department of Transportation, and shall be subject to the approval of the City Engineer.

In these Improvement Standards, the intent and meaning of the terms that are used shall be as defined in State Standard Specifications and as herein specifically noted.

CITY - Shall mean City of Jackson including any special districts administered by the City Council.

CITY ENGINEER - Shall mean the Engineer authorized by the City Council to represent City or their authorized representatives including City Building Official and inspectors under direction of the City Engineer.

CONTRACTOR - Shall mean any person or persons, firm, partnership, corporation, or combination thereof, licensed to perform the type of work involved, who has entered into a contract with any person, corporation, company, special district of the City of Jackson, or his or their legal representative, for the construction of any improvement or portions of any improvement within the City.

DETENTION BASIN - A facility which stores storm water for a relatively short time designed with some type of metered outlet.

DEVELOPER - Shall mean any person or persons, firm, partnership, corporation, or combination thereof, financially responsible for the work involved.

DEVELOPMENT - Shall mean single properties as well as subdivision improvement.

INFILTRATION BASIN - A facility which stores storm water for a relatively short time and is designed to direct storm water to groundwater through permeable soils or ground cover.

LABORATORY - Shall mean any testing agency or testing firm which has been approved by the City Engineer.

SITE IMPROVEMENTS - Shall mean required improvements for projects other than subdivisions.

STANDARD PLANS - Shall mean the most recent volume of the State of California Standard Plans as issued by the Business and Transportation Agency, Department of Transportation, State of California.

STANDARD SPECIFICATIONS - Shall mean the most recent volume of the State of California Standard Specifications as issued by the Business and Transportation Agency, Department of Transportation, State of California.

STATE STANDARD DRAWINGS - Shall mean the most recent Standard Drawings and Plans of the State of California, Business and Transportation Agency, Department of Transportation.

ZONING CLASSIFICATIONS - Shall mean those zones established by and as listed in the Jackson Development Code.

2.00 GENERAL REQUIREMENTS

2.01 Plans and Specifications Required

Complete plans and specifications shall be prepared by an engineer for all proposed streets, drainage facilities, sewerage, street lighting, and water distribution system improvements. All plans and specifications for improvements to be accepted for maintenance by the City shall be prepared by an Engineer of the appropriate branch of engineering covering the work submitted. All dedications and easements necessary to accommodate all improvements shall be submitted to the City Engineer for approval and offered for dedication to the City. Possession of a complete set of City approved plans and a valid encroachment permit shall constitute the necessary permits for a Contractor to perform work in the City right of ways or easements. Engineer or his representative shall order the Contractor to cease work on any project when the Contractor does not have properly approved plans in his possession. Contractor shall be duly licensed by the State of California and shall be bonded as required to meet the requirements of the City.

2.02 Standard Specifications

The Standard Specifications shall be made a part of contract documents by note or reference which shall appear in the Special Provisions and in the General Notes on the plans. The note or reference shall be as follows:

> *"The Standard Specifications are part of the contract documents of this project and all materials and construction shall be in strict conformance with said Standard Specifications or as authorized by these plans."*

2.03 Plan Submittal

Two sets of plans for subdivisions and two sets of plans for site improvements, complete and in accordance with these Improvement Standards and the Standard Specifications, shall be submitted along with any required specifications, computations, test data, and other material required by the City for approval. When the plans are initially submitted to the City, a plan check fee will be required as a deposit to initiate checking of the plans by the City.

Any portion of the required deposit over and above the accumulated costs expended by the City on the development will be refunded to the Developer. Should there be required alterations or revisions to the plans as submitted, one copy will be returned with the required corrections marked or indicated thereon. Plans not prepared in accordance with these Improvement Standards and the Standard Specifications or plans not prepared consistent with the standards of the profession, may be returned unmarked and unapproved.

No plans will be approved nor construction authorized until such times as all appropriate City Official(s) signify approval on the plans. All changes, corrections, or additions required shall be resubmitted to the City for approval as prescribed. At such times when the plans meet the requirements of the City and the plan check and inspection fees have been paid, the plans will be signed and stamped “Approved for Construction.” The Engineer shall deliver not less than three complete sets of plans to the City Engineer. Two sets will be retained by the City.

Excepted from approval are any features of the plans that are contrary to or in conflict with any California State Law, City ordinance or resolution, generally accepted sound engineering practice, or standards of the profession; even though such errors, omissions or conflict may have been overlooked in City review of the plans.

2.04 Change in Plans During Construction

Should changes become necessary during construction, the Engineer shall resubmit "red lined" plan sheet prints for approval by the City. Necessary changes shall be clearly shown and dated on the plans. Minor changes, which do not affect the basic design or contract, may be made upon the authorization of the City Engineer. All changes shall be shown on "as-built" plans when the work is completed.

2.05 Contractor and Developer Responsibility

Contractor and Developer are directed to the Construction Safety Orders of the Division of Industrial Safety. Contractor and Developer shall conduct all work in accordance with these standards. Contractor and Developer shall be responsible for all damage arising from any failure to comply with such orders regardless of any action taken by the City or its authorized agents.

Contractor and Developer are directed to the regulatory provisions of the State Standard Specifications. City will assume no costs or liability for complying with these provisions.

2.06 Maintenance Guarantee

Developer or Contractor shall guarantee the entire work required by City to be free of defects in materials and workmanship for a period of one (1) year following the date of acceptance of work by the City. Developer or Contractor shall make, at their expense, any repairs or replacements made necessary by defects in materials and workmanship which become evident within guarantee period. The Developer or Contractor shall indemnify and save harmless the City and officers, agents, and employees of the City against and from all claims and liability arising from damage and injury due to said defects. The Developer shall cause all repairs and replacements to be made promptly upon receipt of written order from the City. Should Developer fail to have repairs and replacements made promptly, City shall cause the work to be done, and the surety provided therefore shall be claimed for the cost of all such work.

Maintenance guarantee shall be a surety bond or other approved security which shall be delivered to City prior to recording of a final map or other approval requested of City. Said security shall be in an approved form and executed by a surety company or companies satisfactory to City in the amount of ten percent (10%) of approved engineer’s estimate of construction costs. Security shall remain in force for the duration of the guarantee period specified. In lieu of providing security as prescribed above, the Developer may provide for the Faithful Performance Bond under agreement to remain in force until the expiration of guarantee periods.

Specific guarantees for periods longer than one (1) year may be specified due to special conditions of materials or workmanship.

3.00 CONSTRUCTION STAKING

3.01 Scope

It is the intent of this section to define the responsibilities of the Contractor regarding the use, maintenance, and replacement of construction stakes. The Developer's Engineer or Contractor shall furnish the stakes and reference points for the improvements relative to the work and shall provide restaking as required by the City as set forth in Section 3.03.

3.02 Control Stakes

Control and reference stakes for all construction work shall be conspicuously flagged. Contractor shall be responsible for the preservation and perpetuation of these points, marks, and stakes. When removal of a control point, mark, or stake is required by construction operations, Contractor shall notify the Developer's Engineer at least two (2) working days in advance of such operations. Developer's Engineer shall perpetuate such control points subject to approval of City Engineer.

3.03 Required Staking

The Developer's Engineer shall provide the stakes and reference marks sufficient to control the work. Staking requirements shall be not less than:

A. Street Grading

One set of slope stakes will be set at fifty (50) foot intervals and twenty-five (25) foot intervals along vertical curves. Reference stakes will be set at an appropriate offset from the top of cut or toe of fill. The top of cut or toe of fill need not be staked. The reference stake will indicate the offset to the top of cut or toe of fill and indicate the cut or fill from the reference point to the top of cut or toe of fill. The reference stakes will indicate the cuts or fills and distances from the top of cut or toe of fill to the subgrade hinge point and centerline subgrade elevation.

At street intersections, the radius points for pavement rounding will be staked. The elevation of the top of the stake will be established and marked on witness lath.

B. Clearing

When slope stakes are not required, clearing stakes will be set on streets and roads. Lath marked "CLEAR" will be set at fifty (50) foot intervals at the clearing limits. Lath will be oriented so the marking faces the centerline of the street or the improvement.

C. Sewer

Sewer trunk lines will be staked on an appropriate offset from centerline at fifty (50) foot intervals on tangents and twenty-five (25) foot intervals on horizontal and vertical curves. All manholes and curve points will be staked on an appropriate offset from the sewer centerline. Stakes will indicate offset to pipe centerline and the cut to the flow line of the sewer pipe. When a flow-line grade is indicated on the plans for a sewer service, a cut to the flow line at the end of the service will be marked on the offset stake or witness lath thereto.

D. Curb and Gutter

Stakes for curb and gutter will be set no more than five (5) feet from the proposed work and at twenty-five (25) foot intervals. Subgrade and **forms shall be checked and approved by the City prior to placing curb and gutter**.

E. Cross Culverts

The ends of all cross culverts will be staked by an offset stake set on the prolongation of the centerline of the culvert. Offset stakes will be marked with a cut or fill to the flow line at the ends of the culverts. The final length of cross culverts shall be determined in the field at the time of staking.

F. Underground Storm Drains

Underground storm drains will be staked in the same general manner as sewer trunk lines.

G. Drain Channels

The centerline of drainage channels will be marked with lath at fifty (50) foot intervals for horizontal alignment only. When vertical alignment is noted on the plans, offset grade stakes will be set at fifty (50) foot intervals and slope stakes will be at twenty-five (25) foot intervals along vertical curves.

H. Finish Subgrade

One set of finish subgrade stakes will be set on centerline at finished subgrade at fifty (50) foot intervals on tangent and twenty-five (25) foot intervals on vertical curve by the Developer's Engineer. An additional set of stakes will be set on hinge points at finished subgrade at fifty (50) foot intervals on tangents and twenty-five (25) feet on vertical curves by Contractor and checked by Developer's Engineer. Any realignment or adjustments of stakes on hinge points will be reset and rechecked as necessary. Developer will be responsible for staking base rock

grade from the finished subgrade once the subgrade has been accepted by the City Engineer. The method of staking shall be approved by the City Engineer.

I. Additional Stakes

Any additional stakes required by the City will be set at the Developer's expense.

3.04 Construction Stake Checking

Should occasion arise where the validity of a stake is questionable, either as to its location, offset, cut or fill marked thereon, Contractor shall notify the City Engineer and Developer's Engineer, who will check the stake or stakes in question. It shall be the Contractor's responsibility to examine the stakes before commencing operations. Any stakes found to be in error shall be reset. The Developer shall be responsible for any error in the finished work resulting from questionable or erroneous stakes.

3.05 Construction Staking

When the Developer has a registered civil engineer or licensed land surveyor, other than the engineer who prepared the plans, provide construction staking, he shall provide the City Engineer, in writing, with the name of the individual or firm one week prior to staking of the project for construction. Developer shall be responsible for providing professional engineering services for any plan change which may be required during the construction phase, and for the preparation of revised plans, and preparation of "as-built" plans upon completion of the improvements.

3.06 Lines and Grades

At all points along any grade line shown on the drawings, between the points along any grade line shown on the drawings, and between the points at which the grade elevations are given, the grades shall conform to a straight line except that grading through a vertical curve shall conform to a smooth curvilinear alignment. In any case where grade variation exists, it shall be reported to the Developer and City Engineer.

Contractor shall preserve all stakes and points set for lines, grades, or measurements of the work in their proper place until authorized to remove them by the Developer and City Engineer. All expenses incurred in replacing stakes that have been removed without proper authority shall be paid by the Contractor.

3.07 Utilities

All utilities shall be shown on the plans. The Engineer shall contact utilities early in the planning stage. Prints with the utilities approval shall be submitted to the City. All utilities must be contacted so they can properly plan their relocation work and construction of additional facilities. Engineer shall notify the City Engineer, by letter, when all utility companies have been so notified. Utility company approved plans for underground work in city streets shall be submitted to the City Engineer for review and approval prior to start of work. Utilities shall be clearly identified as existing or proposed.

4.00 RESERVED

5.00 PLAN DETAILS

5.01 General

All plans submitted to the City shall be prepared in a manner that will produce legible prints. All line work must be clear, sharp and heavy. Letters and numerals shall be 1/8 inch minimum height, well formed, and sharp. Numerals showing profile elevations shall not be bisected by station grid lines. Computer drafting shall be by clear and legible lettering acceptable to City.

5.02 Plan Content Requirements

The following requirements shall apply to all plans submitted for approval. Engineer shall prepare plans neat, accurate, and comprehensive in keeping with the standards of the profession. Engineers are directed to Caltrans Standard Plans.

A. Title Sheet

On subdivision or improvement plans, exceeding three sheets in the set, a title sheet shall be prepared showing the entire subdivision or project complete with subdivision or assessment district limits, city limits, street names, section lines, corners, and the location within the City. (Minimum scale 1"=500'.) The title sheet shall also include an index of the sheets; Engineer's name, license number, and signature; the date and scale of the drawing; north arrow; and the block for the necessary approval of the City Engineer and other officials. A sample of the City approval block may be obtained from the City Engineer. All sheets shall be 24" x 36".

B. Layout Sheet

The layout sheet (Sheet 2) shall contain thereon the entire subdivision unit on one sheet in skeleton form shown drainage features and sewer and water lines. Drainage pipe, sewer pipe, water lines, and other underground utilities shall each be identifiable from other underground conduits. Appurtenances such as manholes, valves, and drop inlets shall be shown in their proper location. The scale of the project shall be 1" = 100' or 1" = 200'. An index of the plan and profiles sheets shall be shown on the layout sheet.

C. Title Blocks

Each sheet within the set of drawings shall show the sheet title, sheet number, date, scale, and the Engineer's name, signature, and license number.

D. Right of Way

Right-of-way lines, the boundaries of lots fronting on the street, drainage easements, utility easements, planting easements, section lines and corners, land grant lines, and temporary construction easements both existing and proposed

shall be shown on the plans. All right-of-way and easement lines shall be properly dimensioned.

E. Topography

All pertinent topographic features shall be shown such as street lines, curbs, sidewalks, shoulders, location and size of storm and sanitary sewer lines, high water and frequent inundation levels, water lines, gas lines, telephone conduits, other underground utilities, existing structures, houses, trees (6" and larger) and other foliage, traffic signals, street lights, pull boxes, underground electrical conduits, drainage ditches, utility poles, fire hydrants, retaining walls, masonry structures, and all other features in the area which may affect the design requirements for the area. Any tree (6" and larger) which falls within the existing or proposed right of way or easement shall be shown on the cross section when requested by the City Engineer. Permission to remove any tree (not required to be removed by construction) in the City rights of way or easements shall be obtained from the City Planner prior to removal.

F. Contours, Elevations, and Drainage Plan

Existing contours or supporting elevation data shall be shown on all plans. The Drainage Plan, if required, shall contain contours of the subdivision unit and the immediate vicinity sufficient to indicate the perimeter of areas to be drained by each structure. Calculations supporting the design of drainage facilities shall be submitted with the drainage plan. Scale of plan shall be of sufficient size to clearly show the drainage features and the location of major structures. FEMA established 100 year floodplains shall be identified when applicable.

G. Profiles

Plans shall show the profile of all existing roadway centerlines, existing edges of pavement, existing curb and gutter flow lines, drainage ditches, storm and sanitary sewers. All profiles of proposed improvement shall state centerline elevations at fifty (50) foot intervals and rate of grades, vertical curves and other vertical alignment data. Elevations of any warped surfaces and vertical curves shall be set at twenty-five (25) foot intervals. When required by the City Engineer, the Engineer shall provide centerline profiles and cross section information beyond the limits of the proposed development to facilitate setting proper vertical alignment within the proposed improvement limits.

H. Stationing and Orientation

The stationing on plan and profiles sheets shall read from left to right. Plans shall be so arranged that the north arrow points toward the top or upper 180 degrees of the sheet, insofar as practical.

I. Bench Marks

The bench marks and datum shall be clearly noted on the plans both as to location, description, and elevations. The datum shall be U.S.G.S., NGVD29, NAVD88 or as otherwise approved by the City Engineer.

J. Typical Sections

A typical section, setting out the structural features for each type of facility within the improvement, shall be set forth on the plans.

K. Cross Sections

Cross sections, when required, shall be included with the plans. When, in limited areas, unusual topographic features or special conditions occur that would affect the work, individual cross sections or typical sections may be shown on the pertinent plan sheet.

L. Special Notes

Special notes shall be clearly indicated and it shall be conspicuously noted on the plans that all construction work and installation shall conform to the State Standard Specifications, the City of Jackson Improvement Standards, and that all work is subject to the approval of the City Engineer.

5.03 Plan Format Requirements

All improvement plans shall be prepared on plan and profile sheets, 24" x 36". Scales: Horizontal 1" = 20', 40', or 50'; Vertical 1" = 2', 5', or 10'. Design cross sections plotted on 1" = 5' scale, taken on maximum 50' intervals shall be submitted with preliminary improvement plans or cut and fill slopes shall be shown on the plans. Cross sections shall be plotted with background grid with reference to identifiable base line or centerline.

5.04 Additional Improvements to Be Shown

Storm drainage improvements shall be shown on the street plans. Sanitary sewer and water improvements may be shown on the street plans or separately as indicated above. Street lighting shall be shown separately. Street lighting plans shall be drawn to a scale of 1" = 100' with individual lot dimensions and street dimensions shown. Location of all utilities shall be shown on the "as-built" plans.

5.05 Sign and Striping Plan

Sign and striping plan shall be set forth on a separate plan sheet or detail sheet. Signage and striping shall be consistent with State Standard Drawings, and plan sheets shall contain references thereto.

5.06 Compliance

Plans shall be checked for compliance with these standards and all conditions of approval by the City Engineer. Plan checking deposit shall be as set forth in Section 6.05 of these standards.

6.00 INSPECTION DURING CONSTRUCTION

6.01 General

Any improvement which is intended for future City maintenance responsibility or required by City as a condition of approval, shall be constructed to City requirements and inspected during construction by the City Engineer. Each phase of construction shall be inspected and approved prior to proceeding to subsequent phases.

Inspection includes field inspection during the course of construction and materials testing of those improvements over which no other public agency or utility exercises inspection responsibility.

6.02 Notification

The Engineer shall notify the City Engineer when the Contractor first calls for grades or staking. Any improvements constructed without inspection as provided above or any construction contrary to the orders or instructions of the City Engineer shall be deemed not in compliance with City requirements and will not be accepted by City.

6.03 Compliance and Responsibility

The City will inspect the work for ultimate compliance with the specifications but will not be responsible for the conduct of the work itself or the manner in which it is performed. Requirements of State or Federal agencies shall be verified by appropriate agency representatives.

6.04 Inspection Fees

The applicant shall deposit an estimated fee to cover the City's actual cost of inspection of the project. This fee may be deposited in two installments. The first installment shall be paid when plans are submitted for checking. The balance of the inspection fee shall be deposited prior to approval of the plans. All other public agency or utility fees shall be paid separately by the developer. The inspection fee deposit shall be determined in accordance with Table I.

6.05 Inspection Deposit

Inspection deposits shall be placed in a plan check fund and all charges for inspection, as deemed necessary by the City shall be charged against that fund. No inspection work or construction work shall be undertaken when the cost of such inspection or work exceeds the funds remaining in the account for the project.

Whenever the inspection fee deposit is exhausted, the developer shall deposit additional funds for further inspection work. When the total inspection charges are less than the deposit, the balance will be returned to the applicant after the improvements have been certified as complete by the City Engineer and all conditions of approval complied with.

CITY OF JACKSON

TABLE I **FEE DEPOSIT AMOUNTS**			
Total Estimated Cost of Improvements	**Plan Check**	**Inspection**	**Total**
Less than $10,000	$ 300.00	$ 600.00	$ 900.00
$10,000 to $49,999	$ 500.00	$1,000.00	$1,500.00
$50,000 to $99,999	$1,000.00	$5,000.00	$6,000.00
$100,000 to $399,999	2%*	4%*	6%*
$400,000 and over	1.75%*	3.75%*	5.5%*

*Percentage of Approved Engineer's Estimate of Improvement Costs.

7.00 FINAL INSPECTION

7.01 Clean Up

Upon completion of any improvements which are constructed under and in conformance with these Improvement Standards and prior to requesting a final inspection, the work area shall be thoroughly cleaned of all rubbish, excess material, and all portions of the work shall be left in a neat and orderly condition.

7.02 City Engineer Inspection

Within five (5) working days after receiving a request for final inspection, the City Engineer shall inspect the work. Contractor, Engineer, and Developer will be notified in writing as to any particular defects or deficiencies to be remedied. Contractor shall proceed to correct all defects or deficiencies at the earliest possible date. At such time as the work has been completed, an inspection shall be made by the City Engineer to determine if all defects have been repaired, altered, and completed in accordance with these Improvement Standards. At such time as the City Engineer finds the work acceptable, the City Clerk will be notified and the matter scheduled for City Council approval. The Contractor, Engineer, and Developer will be notified in writing as to the date of final approval and acceptance by the City Council.

8.00 "AS-BUILT" PLAN

8.01 "As-Built" Plan Requirements

One complete set of "as-built" reproducible plans, as prescribed by the City Engineer, shall be submitted to the City Engineer prior to acceptance of the improvements.

Developer's Engineer shall keep an accurate record of all approved deviations from the plans. These are to be utilized with the Inspector's plans for preparing a complete and accurate set of "as-built" drawings for the permanent records of the City. "As-built" plans shall be prepared by the Engineer responsible for the work. Preparation of as-built plans, complete and in accordance with these standards, shall be the responsibility of the Developer.

9.00 IMPROVEMENT AGREEMENTS AND SECURITY

9.01 Improvement Agreement

When project improvements are not completed at the time the Final or Parcel Map is ready for approval by the City Council, the applicant shall enter into an Improvement Agreement with the City. The agreement shall require the applicant to complete all conditions of approval and improvements as shown on the approved improvement plans within the time frame set forth therein.

9.02 Improvement Agreement Security

Applicant's performance under any such agreement shall be secured by a good and sufficient instrument of surety in an amount fixed by the estimated costs of the improvement in accordance with Table II. The estimate of construction costs shall be submitted to the City Engineer for review and approval. Security for City maintained street improvements shall provide that ten percent of the secured amount be withheld by the City for a period of one year after the completion of improvements. The ten percent retention may be used by the City to correct any defects in material or workmanship which become evident in the one year period following completion.

TABLE II

AMOUNT OF AGREEMENT SECURITY

TYPE OF SECURITY	PERFORMANCE	LABOR/ MATERIALS	TOTAL
Bonds	100%	100%	200%
Letter of Credit	100%	50%	150%
Bank Deposit (1)	100%	50%	150%
Deposit with City (2)	100%	50%	150%

(1) Savings account assigned to City.

(2) Deposit in a trust account or a negotiable certificate of deposit with principal payable to the City upon demand.

9.03 Termination

Termination date of any security shall extend beyond the termination date of the agreement or any extension thereof. Termination date shall be subject to the requirements of the City Council.

9.04 Deposits and Certificates

Bank deposits and certificates of deposit shall be purchased or an account opened so that the principal and interest are payable to the City of Jackson.

When the account or certificate is made jointly payable to the developer and the City, the developer shall submit a negotiable order of withdrawal with the bank book or an endorsed certificate.

9.05 Letter of Credit

The letter of credit shall be extended prior to its expiration date for any extension of time requested.

9.06 Performance and Labor/Materials Bond

Performance and Labor/Materials bonds shall be for the amount set forth in Table II. Performance and Labor/Materials bonds shall be provided by an "admitted California surety."

9.07 Security Release

Security will be released upon request of the project proponent in accordance with the terms of these standards, the Development Code, and the Improvement Agreement.

9.08 Time Extension

Upon written request by the developer, no less than thirty days prior to the expiration of the agreement, an extension of time may be requested from the City. To receive approval, the developer shall have made a good faith effort to complete improvement requirements, or conditions or circumstances beyond their control such as weather conditions or litigation shall have prevented completion of the improvements. An extension of time of up to one year may be approved, provided the improvement security is adjusted where required.

10.00 DESIGN STANDARDS - STREETS

10.01 General

The Design Standards provide the minimum standards for the design, construction and alterations for all streets, roadways, drainage, utility placement, and all appurtenances thereto. The Design Standards shall consist of the applicable provisions in the Highway Design Manual, the State Standard Plans, and this Chapter.

The City Engineer, at his discretion, may approve or require modifications to the minimum standards for a particular development whenever it appears necessary, reasonable, and proper. Exceptions to these standards will not be allowed unless the request is accompanied by written justification and certification by a licensed engineer that traffic safety is not compromised.

The Planning Commission or the City Council may specify project specific road improvement requirements different from the standards set forth herein. In all such cases, the "project specific" requirements of the Planning Commission or City Council shall govern.

The City Engineer shall be the final authority on all questions which may arise as to the interpretation of the Design Standards. The City Engineer's decision shall be final and he shall have authority to enforce and make effective such decisions. Appeals of the City Engineer's decisions shall be in writing to the City Manager.

10.02 Street Classifications

Streets shall be classified as arterial, collector, local, or private streets. Street classification shall be as follows:

Arterial: A through street collecting traffic from minor and collector streets and classified in the Circulation Element of the City as an "arterial" street.

Collector: A primary street that collects traffic from local streets and is classified in the Circulation Element of the City as a "collector" street.

Local: A local street that collects traffic along its frontage.

Private: A local street not accepted for maintenance by City.

10.03 Grades, Cross Slope, and Intersections

The criteria for road grades and cross slopes shall be as follows:

A. Minimum grade on new streets shall be 1.00 percent.

B. Minimum grade of gutter section constructed on existing street shall be 0.50 percent with approval of City Engineer.

C. Standard cross slope on new streets shall be 2.0 percent.

D. Minimum cross slope on widening shall be 1.5 percent.

E. Maximum cross slope of the traveled way shall be 3.0 percent.

F. The roadway minimum vertical curve length allowable at the intersection of two grades shall be fifty (50) feet. Vertical curves may be omitted at intersections where the algebraic difference in grades does not exceed 2.0 percent.

G. Streets shall have a desirable maximum grade of 15 percent. Steeper grades may be authorized where justified and approved by the City Engineer. Decision of the City Engineer concerning grades in excess of 15 percent shall be based upon local conditions.

H. When two streets intersect, the minor street shall not have a grade greater than 7.0 percent for a minimum distance of forty (40) feet measured from the curb line of the intersecting street, except in unusually rough terrain, as determined by the City Engineer. The centerline of the lesser intersecting street shall meet the crown slope at the projected lip of gutter. Crown slope of the major street may be reduced to 1.0 percent within the intersection when approved by the City Engineer.

10.04 Design Speed

Streets shall be based upon design speeds as follows:

Classification	Design Speed
Arterial	**45 MPH**
Collector	**35 MPH**
Local and Private	**25 MPH**

Cul-de-sac streets, less than 300' in length, may be designed for 15 miles per hour.

Streets with grades in excess of 5 percent intersecting highways or arterial roads shall have a minimum of thirty (30) feet "storage" area from the edge of pavement of the primary road to the beginning of vertical curves (BVC).

10.05 Geometric and Structural Sections

Geometric and structural sections for proposed improvements shall comply with the following:

A. Cross gutters will be allowed only with the specific approval of the City Engineer. Cross gutters shall be concrete with rebar reinforcement.

B. The curve data for all centerline curves shall be computed and shown on the plans. Where unusual alignment problems exist, less than minimum curve radii

may be allowed when approved by the City Engineer. Property lines radius at curb returns for intersecting streets shall be not less than twenty (20) feet.

C. The property line radius for cul-de-sacs shall be fifty two (52) feet unless otherwise specified by the City Engineer. A curve of twenty (20) foot radius shall connect the tangent and the fifty two (52) foot radius curve. (See Section 16.00, Standard Details.)

D. Cut and fill slopes: Fill slopes shall be 2:1 or flatter and cut slopes shall be 2:1 or flatter depending upon the material encountered. Desired slopes are 3:1 where compatible with other project design criteria. This condition may be modified when engineering studies indicate the need for flatter slopes or when stable slopes can be maintained on steeper grades and are approved by the City Engineer. Slope rounding shall be provided where the height of cuts or fills exceeds six (6) feet.

E. Clearing Right of Way: Designated trees and all brush shall be removed from the road right of way when within a distance of five (5) feet from the edge of the paved surface of the roadway regardless of the width of the paved section. The right of way shall be cleared to a minimum of three (3) feet beyond any cut or fill slope. At intersections, clearing may be required to the property line for a distance of 100 feet from the centerline of the intersection when deemed necessary to provide safe sight distance for approaching traffic.

Tree removal shall be consistent with Jackson Development Code Section 17.40, Landscape Standards and may be restricted by project specific conditions. The clearing limits of this section may be modified to comply therewith.

F. Driveways: In areas where sidehill cuts and fills exceed three (3) feet or where damage may occur to public right of way during future driveway construction, driveways shall be graded into each lot at the time of grading for the roadway. All material from driveway construction shall be disposed of consistent with the grading plan or applicable chapter of the California Building Code.

G. Access Roads: All roads to be accepted for dedication and maintenance by the City shall be paved to the boundary of the subdivision. Private road approaches that encroach into a city street shall be constructed in accordance with these standards.

H. Minimum allowable roadbed structural section shall be as follows:

1. Local Streets	0.25' asphalt concrete 0.75' aggregate base
2. Collector Streets	0.30’ asphalt concrete 0.90’ aggregate base
3. Arterial Streets	0.35' asphalt concrete 1.00' aggregate base

Pavement thickness and total structural section shall be designed on the basis of resistance factor "R" determined in accordance with State of California, Department of Transportation, California R-value determination or other approved method.

The thickness of various structural components shall be determined by the tables, charts, formulas, and procedures contained in Chapter 600 of the State Highway Design Manual and shall be approved by the City Engineer.

The minimum traffic index used for structural section design shall be as follows:

Street Type	Traffic Index
Arterial	7
Collector	6
Local	5.5
Cul-De-Sac	5.5

For “R” value of 25, structural section requirements shall be:

Street Type	**T.I.**	**A.C.***	**A.B.***
Arterial	7	0.35	1.00
Collector	6	0.30	0.90
Local	5.5	0.25	0.75
Cul-de-Sac	5.5	0.25	0.75
* Based on asphalt concrete (A.C.) thickness of 0.5' or less.			
All dimensions in feet.			
Calculations based on procedures in Section 608.4 Caltrans Highway Design Manual.			

I. Where new paving meets existing paving, all low areas shall be paved as directed by City to maintain a uniform cross slope and provide required drainage.

10.06 Testing of Materials

Testing of materials for compliance with these Standards shall be performed in accordance with the methods set forth in the State Standard Specifications. Signed copies of all test results required shall be submitted to the City Engineer. Test results shall show clearly the name of the individual and the firm performing the tests, as well as the name of the project, the date of sampling, and the date of testing.

The tests indicated in the State Standard Specifications will be required at locations and frequencies determined by the City Engineer.

10.07 Right of Way

Minimum right-of-way widths shall be as set forth in these Standards for the type of street under consideration. (See Section 16.00, Standard Details.) In no instance, without specific approval of the City Council, shall a street have a right-of-way width which is less than fifty (50) feet. No street right of way shall be less than forty two feet (42'). Right-of-way requirements for widening at intersections shall be as approved by the City Engineer.

10.08 Signing and Barricades

Street name signs shall be furnished and erected at all intersections. Street name signs shall conform to requirements of these Standards. Street names shall appear on plans submitted for approval.

Where phased improvement covers a portion of the ultimate improvement and where an improved street is proposed to be extended in the future, the improvements shall include a permanent-type barricade at the end of such a street to extend completely across the right of way to serve as a warning to the public. The barricade shall be constructed, painted, and signed in accordance with the Standard Specifications and Standard Plans. Gates may be required where streets stub into areas where ingress and egress is required.

11.00 DESIGN STANDARDS - STORM DRAINAGE

11.01 General

These standards shall serve as a guideline for drainage system design and indicate minimum design standards acceptable to the City.

Improvement projects shall be protected from inundation, flood hazard, sheet overflow, and ponding of storm water, springs, and other surface waters. The design of improvements shall be such that water accumulating within the project will be carried away from the project without injury to adjacent improvements, residential sites, or residences to be constructed on sites within the project, or to adjoining areas. Water accumulating within the project shall be carried to storm drainage facilities or to a natural water course by closed conduit or open channel, and shall meet the design standards herein set forth.

Drainage systems within the project shall accommodate anticipated future development (consistent with the General Plan) within the drainage basin. Off-site drainage facilities shall be adequate for ultimate development of the drainage basin. Diversion of natural drainage will be allowed only within the limits of the proposed improvement. All natural drainage must enter and leave the improvement area at its original horizontal and vertical alignment unless an agreement, approved by the City, has been executed with the adjoining property owners. All concentrated drainage leaving the boundaries of an improvement area shall be connected to existing drainage ways approved by the City Engineer.

Where a subdivision is subject to flood hazard, the developer shall provide flood control works, drainage facilities, or other improvements sufficient to provide all structures or building sites, both existing and proposed, with 100-year flood protection and compliance with the City Flood Plain Ordinance.

Street improvements shall include adequate provisions for storm drainage. Adequate storm drainage shall consist of a system of underground piping, generating self-scouring velocities and leading to a disposal point which is workable under conditions of heavy rainfall and runoff.

Special design problems involving pump stations, infiltration basins, on-site retention, or other unusual features not covered herein, will require individual study and approval. Pump stations will not be allowed except where special circumstances warrant consideration.

11.02 Classification of Storm Drains

Cross Culverts - Drainage culverts transporting runoff across roadways into open ditches or natural drainage courses.

Driveway Culverts - Drainage culverts transporting runoff across driveways.

Onsite Drainage Facilities - All surface drains and underground drainage pipe within the development.

Offsite Drainage Facilities - Facilities required to carry storm water from the proposed project to a natural drainage course or existing conduit.

Modification of storm drain classifications may be required by special conditions. Any modification of classifications will be resolved on an individual basis by the City Engineer.

11.03 Alignment

The location of storm drainage pipelines in new streets shall be under or adjacent to the curb and gutter parallel to roadway centerline. Pipes placed under curb and gutter shall have minimum clearance of 0.5 feet between the bottom of gutter section and top of pipe.

11.04 Lines

Lines shall be as near parallel with the centerline of streets as possible. Angular changes shall not exceed 90 degrees. Open ditches, lined channels, swales, and flood plain areas shall be maintained as nearly as possible in their existing alignment. When an open ditch, other than a roadside ditch, is to be constructed parallel to an existing roadway, the ditch shall be constructed outside the proposed right of way of the ultimate street development.

11.05 Easements

Drainage conduits and channels, when not located in a public street, road or alley, or within an existing public drainage easement, shall be located in a recorded or dedicated public utility / public facility easement (PUE/PFE).

Dedications necessary for construction on private property shall be completed prior to acceptance of improvements by the City. Where a minor improvement of a drainage channel falls on adjacent property, a right of entry shall be obtained from the property owners, and a copy of the right of entry shall be submitted to the City prior to approval of the improvement plans.

Easements for closed conduits shall have a minimum width of fifteen (15) feet. The centerline of the pipe shall be not less than five (5) feet from the easement limit. Pipe may reverse sides of the easement at angle points.

Easements shall provide sufficient widths for vehicle access and working space.

For pipes exceeding 24" in diameter or trenches exceeding five (5) feet in depth, the easement shall have additional width to provide working space as required by the City Engineer.

Easements shall be provided for all ditches, culverts, and conduit systems whether constructed as newly built improvements or as rebuilt improvements and shall adequately meet the minimum width specified herein.

11.06 Natural Drainage Courses

All natural drainage courses within the boundaries of an area to be improved shall be provided with drainage easements extending the full length of the drainage courses within the improved

area. The width of such easement shall be determined from the limit of the 100-year flood plain. A natural drainage course is defined as an existing drainage way having specific sides and bottom, but may not have year-round flow.

11.07 Drainage Study

A drainage study consisting of calculations and a drainage plan shall be submitted with all improvement plans requiring storm drain improvements. The following information shall be included in the drainage study:

A. A drainage plan that depicts onsite facilities, offsite drainage adjacent to the project, and all natural water courses within the project limits.

B. All existing drainage structures shall be checked to see that sufficient capacity exists to safely pass the increased runoff.

C. Calculations as set forth in Section 11.09.

11.08 Drainage Plan

A drainage plan shall be submitted with each set of improvement plans and shall reflect the following criteria:

A. Must be of adequate scale and accurately and clearly show contour lines and reference to the datum.

B. All individual watershed areas shall be clearly delineated on the plan.

C. Concentrated storm flow patterns shall be delineated on the plan.

D. The quantity of water arriving at each structure, pipe or ditch from a 25-year and a 100-year frequency storm shall be calculated and shown on the plan.

E. The size, type, and location of conduit proposed.

F. Channel dimensions and water surface profile computations for 100-year storm when required.

11.09 Calculations

One set of drainage calculations shall be submitted with each set of improvement plans. The calculations shall be submitted by a California registered civil engineer and shall conform to standard engineering practice.

Drainage calculations shall be checked and approved by the City Engineer. Drainage calculations may be from any accepted engineering method. The City will check flow determinations by the rational method.

Storm drains shall be designed to pass a 25-year storm with no head. The 100-year storm must be carried within drainage facility or roadways with no potential for property damage. All major structures shall be designed to pass the 100-year storm.

Runoff factors for the rational method shall be not less than the following:

Land Use	Runoff Factor "C"
Rural Residential	0.35
Single Family Residential	0.45
Multi-Family Residential	0.60
Commercial and Industrial	0.75 - 0.95

Time of concentration (t_c) shall be determined by accepted methods. A 20 minute minimum may be used for unsurfaced basins.

Rainfall intensities shall be in accordance with the "Rainfall Intensity Chart," (See Section 16.00, Standard Details) and shall be not less than:

t_c	i_{10} (in/hr)	i_{25} (in/hr)	i_{100} (in/hr)
20 minutes	2.2	2.5	2.9

Open ditches shall pass the 100 year storm

11.10 Closed Storm Drain Systems

Closed conduits shall be of cast-in-place concrete pipe, precast reinforced concrete pipe, non-reinforced concrete pipe, or smooth wall PVC pipe as set forth in the Standard Specifications. The specific type of pipe or alternate pipes to be used in the development shall be shown on the plans and be subject to approval of the City Engineer.

The minimum pipe diameter allowable on any storm drain trunk line shall be 15 inches for onsite development. The minimum pipe diameter allowable on any drop inlet laterals shall be 12 inches and laterals shall connect directly to a manhole or other drop inlet.

The minimum velocity in closed conduits shall be 2 f.p.s. when flowing at a depth of 0.5 D, (D = pipe diameter).

Minimum cover requirements are shown on Standard Drawings. At locations where the minimum cover requirements cannot feasibly be obtained, conduit shall be backfilled with cement slurry backfill or other method of pipe protection approved by the City Engineer.

11.11 Open Channels

Open channels shall consist of concrete-lined channels, rock slope protection lined channels, or earth channels with approved fabric liners. Open channels shall be designed to the following criteria:

Minimum Velocity

1. Earth channels - 2 f.p.s.
2. Other lined channels - 2 f.p.s.

Maximum Velocity

1. Earth channels - 6 f.p.s.
2. Other lined channels - 10 f.p.s.

All channels with earth sides shall have freeboard of not less than 1.5 feet at design capacity for a 25-year storm. All lined channels shall have freeboard of not less than 0.5 feet at design capacity for a 100-year storm.

In existing channels, abrupt changes in alignment or profile and all underbrush and debris, which restricts flow, shall be removed, trimmed, or otherwise improved.

All open channels shall pass the 100-year storm without the potential for property damage.

11.12 Drainage Structures

Drainage structures shall comply with the following specifications:

Manholes - Manholes shall be standard precast concrete. Cast-in-place type manholes may be used where required. Where special manholes or junction boxes are required, the design shall be approved by the City Engineer. In no case will junction boxes be allowed which are less than twenty-four (24) inches (inside dimensions). Manholes shall have a forty-eight (48) inch inside diameter.

Manholes shall be located at junction points and changes in conduit size. Manholes shall be placed at the BC and EC of all curves and on 300-foot maximum intervals along the curve.

Manholes, junction boxes or inlets shall be placed at intervals not to exceed 400 feet. All manholes and junction boxes other than inlets shall have standard manhole covers, as shown in Standard Drawing SS-3. Manholes will not be allowed in gutter flow lines.

Drop Inlets (DI) - Drop inlets shall be open curb-face types as shown in the Standard Drawings or other approved inlets.

Drop inlets shall be spaced so that the length of flow in the gutter does not exceed 600 feet. The depth of the flow in the gutter shall not exceed 0.35 feet for a 25-year storm. Outfall pipes shall accommodate the design runoff taking into consideration bypass flow from upstream inlets.

Junction Boxes - Junction boxes shall be constructed of reinforced concrete or fabricated from reinforced pipe sections. Minimum wall thickness for reinforced concrete junction boxes shall be 8 inches.

The inside dimension of junction boxes shall be sufficient to provide a minimum of three inches clearance on the outside diameter of the largest pipe in each face. Junction boxes deeper than four feet shall have a minimum inside dimension of 48 inches.

Headwalls, Wingwalls, Endwalls, Trash Racks, and Railings - All headwalls, wing-walls, and endwalls shall be considered individually and shall be, in general, designed in accordance with the Standards and Specifications of the California Department of Transportation and the requirements of the City.

Trash racks shall be provided where, in the opinion of the City Engineer, they are necessary to prevent clogging of culverts and storm drains or eliminate hazards. Trash racks shall conform to the requirements of the City Engineer. Temporary trash racks will be allowed where pipe will be extended in the near future.

On cross culvert drains, flared-end sections shall be used where required by the City Engineer.

Guardrails may be required by the City Engineer at culverts, headwalls, and box culverts and on steep side slopes. When so required, the railing shall be installed in accordance with the requirements of the current edition of the California Building Code or State of California, Department of Transportation.

Pipe used as cross culverts to open ditches may be corrugated steel.

Detention Basins - Storm water detention basins may be allowed when downstream improvements are either not feasible or impractical at the time of development. Basins may be considered a permanent means for handling peak storm runoff flows. A plan may be required outlining the proper maintenance and/or abandonment of the basin in the future.

Basins shall be constructed such that the collection system drains into the basin by gravity. Design criteria shall be as follows:

Design Storm: 100 year, 24 hour
Basin volume shall be calculated by V=CAR/12 where:

C = Runoff Coefficient (Section 11.09)
A = Contributing Area in Acres
R = Total Rainfall in Inches for the Design Storm (100 Year, 24 hour event in inches)

The volume shall account for a constant outflow not to exceed the pre-development peak runoff rate.

Alternate methods for volume calculations are subject to approval of the City Engineer.

12.00 DESIGN STANDARDS - SANITARY SEWER

12.01 Design Flow

An average flow of 100 gallons per person per day or 350 gallons per dwelling unit per day shall be used for design of sewers with peak flows calculated using the factors from the peak flow factor chart (See Standard Details). All sewers shall be designed to carry peak flows without surcharging the manholes.

The estimated population used for design, including population equivalents for commercial, industrial, and institutional uses, shall be submitted prior to commencement of improvement design.

Sewer mains subject to extension in the future shall be sized to serve the entire area tributary to the proposed development. The design engineer shall submit a study substantiating the proposed size of sewer in such cases. Discussion of parameters with the City Engineer is advised prior to the study.

12.02 Gradients

Sanitary sewer gradients shall be designed to provide a minimum flow velocity of two feet per second with pipes flowing half full. The following table indicates slopes which will provide that velocity. These shall be the minimum slopes for design of sanitary sewers unless flatter slopes are specifically approved by the City Engineer.

MINIMUM SEWER GRADIENTS

DIAMETER	SLOPE (Ft/Ft)
6"	.0050
8"	.0035
10"	.0025
12"	.0020
15"	.0015
18"	.0012
Service Line (4")	1/4 inch per foot (.020)

At changes in pipe size, the invert of the pipe flowing from the manhole shall be sufficiently lower than the incoming pipe in order that the inside crown elevation of both pipes is the same.

At manhole locations where angles of deflection occur in the alignment of the sewer, the pipe invert shall have a minimum drop from inlet to outlet according to the following table:

MINIMUM FLOW LINE DROP THROUGH MANHOLE

ANGLE OF DEFLECTION	INVERT DROP (INLET TO OUTLET)
0 to 45 degrees	.05 feet
45 degrees to 90 degrees	.10 feet
90 degrees plus	.20 feet

A drop manhole shall be constructed at any location where there is a drop in the sewer invert of more than 1.5 feet. Manhole structures used shall be in accordance with the Standard Details.

12.03 Pipe Size

Sewer pipe sizes shall be adequate to carry the peak design flows at the design gradient with a minimum size of 6 inch diameter except for service lines. Minimum size for main line sewers downstream of the last manhole on any given collector line shall be 8 inches unless otherwise approved by the City Engineer. Service lines shall be 4 inch diameter minimum except where estimated flow requires a larger size.

12.04 Pipe Strength Class

Manufacturer's specifications shall apply as to the proper class of pipe required for installation in the work except where these Standards are more stringent. Engineer may be required to substantiate the proposed class of pipe as required by the City Engineer.

12.05 Location and Alignment

Sanitary sewers shall be installed within right-of-way dedicated for public streets where practicable. If not located in street rights of way, sewers shall be installed within the center 10 feet of a 20 foot wide permanent easement dedicated or deeded to the City as a public utility easement. In case of hardship in providing a 20 foot width, lesser widths may be approved on an individual basis by the City Engineer.

Where a curved alignment is necessary, the minimum radius of curvature shall be 400 feet. In no case shall the maximum deflection of pipe joints exceed the recommendation of the pipe manufacturer. Location of sewer lines relative to domestic water facilities and improvements shall be in accordance with applicable public health standards.

12.06 Minimum Depth

The depth of any sanitary sewer shall be adequate to provide a minimum cover of 4 feet in any traveled way. All service lines will, wherever practicable, be maintained at 4 feet cover at the property line. Minimum cover on service lines shall be 3.0 feet throughout the length of the line within the public rights of way.

Maximum depth shall not exceed 8 feet without the written consent of the City Engineer.

12.07 Manhole Locations

Manholes shall be constructed at all pipe line intersections except service lines, at angle points, at changes in pipe size or gradient, at the terminus of lines and at maximum intervals of 350 feet on sewers not greater than 12 inches in diameter or at intervals of 500 feet on sewers greater than 12 inches in diameter. Where manhole locations are fixed by intersections, the spacing of intervening manholes shall be approximately equal. All manholes shall have "all weather" vehicular access subject to the approval of the City Engineer.

12.08 Cleanouts or Flushing Holes

Cleanouts or flushing holes may be used in lieu of manholes at the terminus of any sewer where the distance from the terminus to the next manhole does not exceed 200 feet. Cleanouts on service lines shall be as shown on the Standard Details.

Temporary cleanouts may be installed at terminus of lines intended for future extension.

12.09 Stubs for Future Extension

Stub pipes shall be installed in manholes with appropriate plugs or caps, where shown on the drawings, for anticipated future extension and shall be extended to the project limits or across project frontage when required by the City Engineer. The location and size of stubs is subject to approval by the City Engineer.

12.10 Service Lines

Service lines from the main to the property line shall be installed for each and every residence or structure. Service lines installed within the property lines shall be in conformance with the applicable edition of the California Plumbing Code and these Improvement Standards.

The exact location of service lines passing under curb, gutter, and sidewalk shall be indicated with the letter “S” cast in the curb directly above the underground service line.

12.11 Lift Station and Force Main Design

Lift station and force main design shall be submitted by the Engineer along with supporting data and calculations. Discussion of parameters with City Engineer prior to design is advised.

13.00 CONSTRUCTION STANDARDS - STREETS

13.01 Lines and Grades

Attention is directed to Section 3.00, “Construction Staking,” of these Improvement Standards. Construction staking to be supplied by the Engineer shall consist of horizontal and vertical location of curb, gutters, valley gutters, and storm drains as determined by the Engineer. Flow line, and grate and rim elevations of drop inlets and junction boxes shall be staked with offsets. All supplemental construction staking required by the Contractor shall be supplied by the Contractor. Engineer may revise curb and gutter alignment in the field to avoid tree root structure or conform to existing improvements.

13.02 Order of Work

Attention is directed to Section 5-1.05, "Order of Work," and Section 4-1.04 "Detours," of the State Standard Specifications where they apply.

Contractor shall provide City with a schedule of work, and Contractor shall perform all work in accordance therewith. Should circumstances cause Contractor to anticipate falling out of compliance with said schedule, Contractor shall notify City in advance and provide revised schedule for review and approval by the City.

13.03 Maintaining Traffic

Attention is directed to Sections 7-1.08, "Public Convenience," 7-1.09, "Public Safety," and 12, "Construction Area Traffic Control Devices," of the State Standard Specifications and these special provisions. Nothing in these special provisions shall be construed as relieving the Contractor from his responsibility as provided in said Section 7-1.09.

Lane closures shall conform to the provisions of Section 13.05, “Traffic Control System for Lane Closure" of these Improvement Standards.

The Contractor shall notify local authorities of his intent to begin work at least 5 days before work is begun. The Contractor shall cooperate with local authorities relative to handling traffic through the work area and shall make his own arrangements to keep the working area clear of parked vehicles.

Whenever construction vehicles or equipment are parked on the shoulder within 6 feet of a traffic lane, the shoulder area shall be closed with fluorescent traffic cones or portable delineators placed on a taper in advance of the parked vehicles or equipment and along the edge of the pavement at 25-foot intervals to a point not less than 25 feet past the last vehicle or piece of equipment. A minimum of 9 cones or portable delineators shall be used for the taper. A C23 (Road Work Ahead) or C24 (Shoulder Work Ahead) sign shall be mounted on a telescoping flag tree with flags. The flag tree shall be placed where directed by the Engineer.

Minor deviations from the requirements of this section concerning hours of work which do not significantly change the scope of the work may be permitted upon the written request of the Contractor if in the opinion of the City Engineer public traffic will be better served and the work

expedited. Such deviations shall not be adopted until the City Engineer has indicated his written approval.

13.04 Construction Area Signs

Construction area signs shall be furnished, installed, maintained, and removed when no longer required in accordance with the provisions in Section 12, "Construction Area Traffic Control Devices," of the State Standard Specifications.

Type IV reflective sheeting for sign panels for portable construction area signs shall conform to the requirements specified as "Pre-qualified and Tested Signing and Delineation Materials" by Caltrans.

13.05 Traffic Control System for Lane Closure

A traffic control system shall consist of closing traffic lanes in accordance with the provisions of Section 12, "Construction Area Traffic Control Devices," of the State Standard Specifications and the provisions under "Maintaining Traffic" elsewhere in these Improvement Standards.

The provisions in this section will not relieve the Contractor from his responsibility to provide such additional devices or take such measures as may be necessary to comply with the provisions in Section 7-1.09, "Public Safety," of the State Standard Specifications.

If any component in the traffic control system is displaced, or ceases to operate or function as specified, from any cause, during the progress of the work, the Contractor shall immediately repair said component to its original condition or replace said component and shall restore the component to its original location.

When lane closures are made for work periods only, at the end of each work period, all components of the traffic control system, except portable delineators placed along open trenches or excavation adjacent to the traveled way, shall be removed from the traveled way and shoulder. When the Contractor so elects, said components may be stored at selected central locations approved by the Engineer, within the limits of the right of way.

Work areas adjacent to city streets shall be open to two-way traffic by 4:00 p.m. each work day. One lane shall remain open to traffic during construction unless otherwise approved by the City.

Contractor shall submit a Traffic Control Plan for review and approval by the City Engineer and Police Chief prior to commencing work affecting city streets.

13.06 Obstructions

Attention is directed to Sections 8-1.10, "Utility and Non-Highway Facilities," and Section 15, "Existing Highway Facilities," of the State Standard Specifications.

The Contractor shall notify the City and the appropriate regional notification center for operators of subsurface installations at least 2 working days, but not more than 14 calendar days, prior to

performing any excavation or other work close to any underground pipeline, conduit, duct, wire or other structure. Regional notification centers include but are not limited to the following:

NOTIFICATION CENTER	TELEPHONE
City of Jackson	1(209)223-1646
Underground Service Alert-Northern California (USA)	1(800)227-2600 or 811

13.07 Adjust Utilities to Grade

Contractor shall adjust all valve boxes, manhole frames, and meter boxes to grade in accordance with the approved plans and these Improvement Standards. (See Section 16.00, Standard Details)

13.08 Clearing and Grubbing

Clearing and grubbing shall conform to the provisions in Section 16, "Clearing and Grubbing," of the State Standard Specifications.

Contractor shall protect existing trees from damage caused by his operations. All work in drip line of trees shall be as directed by City Planner. Pervious backfill shall be placed around all root structures exposed by Contractor's operations. Attention is directed to Section 17.40, Landscape Standards of Jackson Development Code and specific project conditions of approval.

13.09 Asphalt Concrete

Asphalt concrete and pavement reinforcing fabric shall conform to the provisions in Section 39, "Asphalt Concrete," of the State Standard Specifications and shall be ½" or ¾" maximum, medium grade, Type B aggregate as directed by the City Engineer.

13.10 Pavement Reinforcing Fabric

Pavement reinforcing fabric shall conform to the provisions of Section 88-1.02, "Pavement Reinforcing Fabric" of the State Standard Specifications. Reinforcing fabric shall be placed at location specified on the plans or in accordance with limits marked in the field.

13.11 Fog Seal Coat

Fog seal coat shall conform to the provisions in Section 37-1, "Seal Coats," of the State Standard Specifications. Fog seal shall be 60 percent asphalt emulsion and 40 percent water and shall be applied at the rate of 0.10 to 0.12 gallons per square yard. Contractor shall provide City Engineer verification of asphalt emulsion used.

13.12 Striping and Pavement Markings

Roadway striping shall conform to Section 84, "Traffic Stripes and Pavement Markings," of the State Standard Specifications, Manual on Uniform Traffic Control Devices, the approved plans and these Improvement Standards.

13.13 Subsurface Drain

Contractor shall construct subsurface drain where required in accordance with Section 68 of the State Standard Specifications, the approved plans and these Improvement Standards.

13.14 Locate and Protect Existing Utilities

This item of work shall cover the location and protection of ALL existing underground utilities as required under Section 4215 of the Government Code as amended and Section 13.06, "Obstructions," of these Improvement Standards.

Contractor shall locate existing utilities and pothole designated areas for location and protection of existing underground facilities within the project limits prior to start of work and as necessary to coordinate and schedule his work.

14.00 CONSTRUCTION STANDARDS - STREET LIGHTING

General

Street Lighting improvements shall be constructed in conformance with Section 86, Signals, Lighting and Electrical Systems, of the State Standard Specifications and the requirements of the National Electric Code (NEC) except as modified by the these improvement standards. The work shall consist of furnishing and installing luminaires with high pressure sodium lamps, photoelectric cells; electrolier standards, electrolier arms and foundations, conduit and conductor wiring and all other materials and appurtenances in accordance with the project plans and these standards.

14.01 - Materials and Construction

All materials and construction shall be in compliance with this section of these Improvement Standards.

A. All materials delivered to the job shall be new and best quality of their respective grades in accordance with the following specifications and packed in their original sealed containers. All materials to be installed shall bear the Underwriters Laboratories, Inc. (U.L.) label.

B. The Contractor shall use materials mentioned in these Improvement Standards as standard, and in no case will a substitute be allowed without written approval of the City Engineer.

C. All work and material shall be protected at all times. Conduit openings shall be closed with protective caps during installation and all materials shall be covered and protected against dirt, water, and mechanical or other injury. All materials damaged during course of construction shall be replaced or repaired to original condition by the Contractor prior to acceptance of work.

D. The Contractor shall not allow or cause any of his work to be covered up or enclosed until it has been inspected and approved by the City Inspector. Should any of the work be enclosed or covered up before such inspection, the Contractor shall uncover the work at his own expense and after it has been inspected and approved make all repairs with such material as may be necessary to restore all work to its original and proper condition.

E. The Contractor shall furnish and install the street lighting equipment in accordance with these Improvement Standards.

14.02 - Foundations

Foundations shall be cast-in-place and in conformance with Section 86-2.01 "Excavating and Backfilling," and Section 86-2.03, "Foundations," of the State Standard Specifications except as amended herein and on the Standard Details.

14.03 - Electrolier Standards

Electrolier standards shall be defined for the purpose of these Improvement Standards to include the pole, base, and base cover. Electrolier Standards shall conform to the Standard Details and the following requirements:

A. Each standard shall have an identification Street Light number sticker as assigned by PG&E.

B. The hand hole shall be oriented on the pole so that a technician facing oncoming traffic while facing the hand hole.

C. All electrolier standards shall be furnished with a grounding lug or nut installed opposite the hand hole/removable access door and inside the standard.

D. Cobra Head Electrolier Standards: Electrolier standards for Cobra head fixtures shall conform to the Standard Details and the following criteria:

    1. The pole shall consist of galvanized steel material with a minimum thickness of 11 gauge.

    2. The poles shall be single-arm poles unless the Project Plans specify otherwise.

14.04 - Electrolier Arm

Electrolier Arms shall conform to City Standard Details, be six (6) feet long unless otherwise specified, and consist of 11 gauge galvanized steel.

14.05 - Conduit

Conduit shall be furnished and installed, conforming to the Standard Details, the requirements of Underwriters Laboratories Publication UL 543, and the following:

A. Conduit shall be $1^1/_2$" PVC, Schedule 40 conduit.

B. Cutting and machining of conduit shall be in accordance with the manufacturer's recommendations. Pre-assembly of sections of conduit shall not be permitted except where jacking is required.

C. Pulling bells shall be installed on the ends of conduit terminating in pull boxes and electrolier standards.

D. The installation of conduit shall conform to the following:

    1. Excavation and Backfill for conduit installation shall conform to Section 15.04 " Trenches & Backfill," of the City Improvement Standards except

as amended by this Section 14, "Street Lighting," of the City Improvement Standards and the Standard Details.

2. The conduit shall be laid over two inches of uniformly spread sand, and shall be covered by a minimum of 6 inches of sand.

14.06 - Pull Boxes

Pull boxes shall conform to the provisions of Section 86-2.06, "Pull Boxes," of the State Standard Specifications as amended herein by this Section 14, "Street Lighting," of the City Improvement Standards and Standard Details.

A. Pull boxes shall be precast reinforced concrete, Caltrans #3 1/2 Box with brass hold down bolts.

B. The cover shall be marked "Street Lighting."

C. Grout shall not be placed in the bottom of the pull box.

14.07 - Conductors and Wiring

Conductors and wiring shall conform to the provisions of Section 86-2.08, "Conductors," and Section 86-2.09, "Wiring," of the State Standard Specifications as amended herein by this Section 14, "Street Lighting," of the City Improvement Standards and Standard Details.

A. Conductors shall be AWG and THHN copper stranded conductor Underwriters Laboratory Approved.

B. The size of the conductors shall be as designated on the Project Plans.

C. Any NEC approved splice excluding wire nuts connections may be used for splice connections.

D. Splices shall be insulated in accordance with Section 86-2.09E, "Splice Insulation," type "B" method of the State Standard Specifications.

E. A fused disconnect splice connector shall be installed in each conductor between the line and ballast and shall be located and readily accessible within the hand hole of the electrolier standard. The fused disconnect splice shall consist of a Class CC (NEC) midget fuse holder with a 5 amp 250 volt non time delay midget fuse.

14.08 - Luminaires

Luminaires shall conform to the Standard Details and the following requirements:

A. Luminaires shall be Cobra Head and consist of a housing, a reflector, a photoelectric control, and integral regular type ballast unless otherwise approved by the City Engineer. Luminaires, complete with lamps, shall be installed in the proper orientation to produce the desired light pattern and shall be completely assembled and connected to the conductor. The operating voltage shall be 120 volts unless otherwise specified.

B. Ingress Protection (IP) shall have a minimum rating of 55.

14.09 - Lamps

Unless otherwise specified, metal halide or high pressure sodium lamps shall be installed in the luminaires. The wattage of the lamps shall be specified on the Project Plans.

14.10 - Photoelectric Control

Photoelectric control shall be multi voltage photoelectric relay on a twist lock receptacle. A photoelectric cell shall be installed on each street light located on the top of the luminaire fixture.

14.11 - Service Connection

Service connections for street lights served by underground electrical systems will be made at the Service Point Location designated on the Project Plans which is normally a PG&E secondary box. Service Connections shall conform to the following requirements:

A. The Contractor shall provide conduit and wire from the PG&E secondary box to and throughout the new street light system.

B. Wires shall be tagged at secondary box in accordance with the latest and applicable PG&E detail.

C. Service connections for electroliers served by the overhead electrical systems will be made at a junction box located at the base of the service riser pole. The Contractor shall provide the junction box, conduit and wire from the junction box to the pull box adjacent to the nearest street light.

D. All service connections will be made by PG&E. The Contractor/Developer shall bear all costs by PG&E for service connection(s).

15.00 CONSTRUCTION STANDARDS - STORM DRAIN AND SANITARY SEWER

15.01 Sanitary Sewer Pipe

Sewer Pipe shall be PVC or ductile iron pipe in accordance with the plans and specifications. Sewer pipe shall be PVC pipe with maximum SDR of 35 in compliance with ASTM D3034 and shall be installed in conformance with ASTM D2321 or as modified herein. Damaged pipe shall be removed and replaced. Field repairs to PVC pipe will not be allowed.

Ductile iron pipe shall be cement lined, and shall conform to AWWA Specification C151 and shall be thickness of Class 51 or approved equal.

15.02 Storm Drain Pipe

Storm drain pipe shall conform to the provisions in Sections 61 through 67 of the State Standard Specifications.

Backfill material shall conform to Section 16.00, Standard Details.

15.03 Installation

Pipe shall be laid in strict conformity with the prescribed alignment and grade specified in the plans and these Improvement Standards, or as directed by the City Engineer. Before any length of pipe is laid, it shall be carefully inspected for defects. No pipe or other material that shows defect shall be placed. Pipe laying shall proceed upgrade with the bell ends of the pipe placed upstream. Each section of pipe shall be laid in such a manner as to form a water tight concentric joint with the adjoining pipe. The interior of the pipe shall be kept clear of all dirt and debris during construction.

All pipe laying and joining, including the maximum deflection of joints in curved alignment shall be in accordance with the pipe manufacturer's specifications and as directed by the City Engineer.

Small diameter storm drain connections to 36" diameter storm drain shall be in accordance with 36" diameter pipe manufacturer’s recommendations and shall be water tight. No protrusion into large diameter pipe will be allowed.

Deflection for PVC pipe after installation shall not exceed manufacturer’s recommended maximum deflection at any location. Should the installed pipe exceed manufacturer’s recommended maximum deflection, each and every length of pipe so affected shall be removed and replaced.

Sewer service connections shall be connected to the new pipe with PVC wye compatible with the new sewer pipe. Mechanical saddles shall not be used. Contractor’s attention is directed to Section 15.09, "Sewer Lateral Adjustment to Grade and Sewer Lateral Connection," of these Improvement Standards.

15.04 Trenches and Backfill

This work shall consist of performing all operations necessary to excavate earth and rock or other material, of whatever nature, including water, regardless of character and subsurface conditions, necessary to excavate trenches for pipes and appurtenances; to place backfill for structure, pipes and appurtenances and other facilities; to backfill trenches and depressions resulting from the removal of obstructions; to remove and replace unsuitable material; to construct protection dikes; and to remove unstable material and slide material which may enter trenches. All such work shall be in conformance with the approved plans and these Improvement Standards or as directed by the City Engineer. Typical trench details shall be shown on the plans.

Where pipes are to be installed above original ground or in new embankment fills, embankment shall first be constructed to the required height for a distance on each side of the pipeline of not less than five feet (5'). Embankment shall have relative compaction of not less than ninety-five percent (95%). Upon completion and approval of the embankment the trench shall be excavated with the sides nearly vertical and the pipelines installed in accordance with these Improvement Standards.

When a firm foundation is not encountered due to soft, spongy, or other unsuitable material, such material shall be removed to the limits directed by the City Engineer, and the resulting excavation shall be backfilled with approved washed drain rock compacted to ninety-five percent (95%).

Materials excavated from trenches shall be placed and maintained so as to offer minimum obstruction to traffic.

Ditches shall be kept clear for the purpose of handling road drainage. Drainage ways, walkways, and driveways shall be kept clear at all times.

At the end of each working day, there shall be no open trench for any excavation operation, unless otherwise permitted by the City Engineer.

In connection with earthwork, all tests shall be made in conformance with the following requirements set forth in the State Standard Specifications:

Tests	Test Method No
Relative Compaction	Cal 216 & 231
Sand Equivalent	217
Resistance (R-value)	301
Sieve Analysis	202

Foreign material which falls into the trench prior to or during placement of the backfill shall be removed.

The trench widths set forth on the plans are minimum widths. No caving within the roadway will be permitted. Where excavation greater than the specified widths is necessary for execution of the work, machine or hand excavation to a stabilized slope will be permitted provided one-way traffic can be maintained. A minimum trench width is the distance face-to-face of trench walls or inside face to inside face of sheeting should solid sheeting be used. Maximum trench widths from the bottom of the trench to the top of the pipe shall be limited to six inches (6") outside the specified minimum trench width, except with specific approval by the City Engineer.

The Contractor shall furnish all materials and facilities required for trench excavation and shall make trenches and excavation dry throughout all pipe laying operations.

The location of underground utilities or other obstructions shall be determined by the Contractor sufficiently in advance of excavation so that pipe alignment can be confirmed or re- routed without delay. Contractor's attention is directed to Section 13.14, "Locate and Protect Existing Utilities," of these Improvement Standards.

Material for backfill shall be placed in uniform horizontal layers not exceeding one foot (1') in thickness before compaction, and shall be brought up uniformly on all sides of the trench, structure or facility. When the Contractor can satisfactorily demonstrate to the City Engineer an alternative method of placing the backfill so that all requirements, other than the layer thickness, are met, the City Engineer may permit the Contractor to use the alternative method. Under no circumstance will the Contractor use the alternative method unless the City Engineer's approval is obtained in writing.

Each layer of backfill shall be compacted to a relative compaction indicated for the backfill involved. Compaction of Class 3 Backfill by ponding and jetting outside City or State rights-of-way will be permitted when the backfill material, as determined by the City Engineer, is of such character that it will be self-draining when compacted and that foundation materials will not soften or be otherwise damaged by the applied water and no damage from hydrostatic pressure will result. When ponding and jetting is permitted, material for use as Class 3 Backfill shall be placed and compacted in layers not exceeding three feet (3') in thickness. The work shall be performed in such a manner that water will not be impounded. Ponding and jetting methods, if allowed, shall be supplemented by the use of vibratory or other compaction equipment when necessary to obtain required compaction.

Backfill shall not be placed until the pipe or other facility has been inspected by the City Engineer and approved for backfilling. The percentage composition by weight as determined by laboratory sieves shall conform to the following requirements:

Class 1 Backfill

Sieve Sizes	% Passing Sieves*
3/4"	100
½"	30-50
No. 4	0-15
No. 6	0

Sand equivalent not less than 20
*Gradations requirements may be waived with written approval from the City Engineer.

"Pervious backfill" shall be coarse or medium screenings in accordance with Section 37, "Bituminous Seals," of the State Standard Specifications or as otherwise approved by City Engineer.

Class 2 Backfill

Class 2 Aggregate Base, 1-½" maximum, shall be in accordance with Sections 26-1.02, 26-1.02B, 26-1.035 of the State Standard Specifications except that percentage of No. 200 material shall be 15-30% unless otherwise approved by the City Engineer.

Class 3 Backfill

Material for Class 3 Backfill may consist of material from excavation free from rocks or lumps exceeding three inches (3") in greatest dimension, vegetable matter, and other unsatisfactory material. Backfill shall be compacted to the relative compaction shown on the plans or as set forth in these Improvement Standards.

Class 4 Backfill

Class 4 Backfill shall be a cement-sand slurry comprised of aggregate, cement and water. The aggregate, cement and water shall be proportioned either by weight or volume. Cement used shall be 190 to 210 pounds for each cubic yard of material produced. The water content shall be sufficient to produce a fluid workable mix that will flow and can be pumped without segregation of the aggregate while being placed.

Materials shall be thoroughly machine mixed in a rotary drum mix truck and placed in the trench from a direct truck discharge unless otherwise approved.

Mixing shall continue until cement and water are thoroughly dispersed throughout the material. All mixed slurry shall be placed within one hour of the introduction of water and cement to the material.

Aggregate shall be free of organic materials and other deleterious substances and have a minimum sand equivalent of 20. Aggregate shall conform to the following grading:

Sieve Sizes	% Passing Sieves*
½"	95-100%
3/8"	80-100%
#4	75-100%
#100	10-24%

Class 1 or Class 2 Backfill may be used as Class 4 Aggregate subject to the approval of the City Engineer.

The Contractor may use Class 4 backfill, slurry cement backfill, at locations approved by the City Engineer as an alternative to Class 1 backfill. Slurry backfill shall be placed to neat-line trench walls using care to completely envelope the pipe in the backfill. Road surfacing will not be permitted until the City Engineer is satisfied that the set is sufficient to support traffic but in no case prior to setting four (4) hours.

The Contractor may use sufficient amounts of additives for speeding the set of slurry cement backfill in accordance with manufacturer's recommendations. No additive shall be used without prior approval of the City Engineer as to type and amount.

Slurry cement backfill shall be placed in a uniform manner that prevents voids in, or segregation of the backfill and will not float the pipe.

15.05 Pipeline Testing

Testing of pipe lines for leakage shall be done prior to acceptance of the completed facility. All pipe lines shall be air tested under the terms of the Ramseier Method as interpreted and reduced below.

The pipe line to be tested shall be plugged and pumped full of air to a pressure of not to exceed 4.0 psi above the average back pressure created by any ground water that may submerge the pipe. A stabilization period of not less than 5 minutes shall follow filling prior to beginning the test unless waived by the City Engineer. The pressure at the beginning of the test shall not be less than 3.0 psi. The allowable time for the pressure to drop a maximum of 0.5 psi is set forth below.

Pipe Size	Allowable Time For 0.5 psi Drop
4"	125 seconds
6"	185 seconds
8"	245 seconds
10"	306 seconds
12"	370 seconds
15"	460 seconds

18"	550 seconds
24"	735 seconds

If the pressure drop exceeds 0.5 psi over the time allowed, that section of pipe shall have failed the test and the Contractor shall locate and repair the faulty portion or portions and successfully retest.

Prior to air testing the Contractor shall satisfy the City Engineer that the lines are free of obstructions to the point that the air test is deemed valid by the City Engineer. Balling and flushing may be done at this time; however, balling and flushing is required after completion of all surface work.

Hydrostatic testing of lines may be substituted for air testing when approved by the City Engineer.

15.06 Tests for Obstructions

All sewer pipe lines shall be tested for obstructions and cleaned by balling and flushing. The ball shall be controlled by a tag line or rope or sewer rods and shall be permitted to move slowly through the sewer pipe. The ball shall be followed by a 5% point mandrel.

The ball shall be passed freely through the test section and all debris flushed ahead of it shall be caught and removed at the first downstream manhole. If the mandrel is stopped or prevented from moving freely by debris, damaged pipe, alignment, irregularity or any other cause, the Contractor shall locate and remedy or repair the obstruction and shall retest the conduit to the satisfaction of the City Engineer.

15.07 Sanitary Sewer Manholes

All manholes shall be of concrete construction and shall be placed in accordance with the approved plans, and these Improvement Standards. Control of water in excavations shall be to the satisfaction of the City Engineer. Precautions shall be taken to assure that sewer pipe entering and leaving manholes does not deviate from the installed alignment and grade during and after construction. Flex connectors at the inlet and outlet of sewer manholes shall comply with ASTM C-923. Sufficient material shall be placed on sewer lines to prevent movement. Ground beneath the manhole shall be compacted to 95% relative compaction prior to placing the base.

All manholes shall be precast concrete bases with precast reinforced concrete pipe sections, tapered sections, and adjustment rings. Reinforced concrete parts shall conform to ASTM designation C-478, and pipe sections shall be not less than 4 feet inside diameter.

Manhole joints shall be sealed against infiltration and exfiltration by means of sand-cement mortar between each joint, or by means of joint sealing compound as manufactured by the K.T. Schneider Co., Houston, Texas under the brand name "Ram-Nek," or "Quick-Seal," as manufactured by Associated Concrete Products, Inc., or approved equal. Appropriate primers and preparation as specified by manufacturer shall be used.

Manholes shall be finished inside and out with sand-cement mortar to produce a water tight, smooth finish. Flow line channel through manhole shall have smooth trowel finish.

Sewer lift station manholes shall be 6' or 8' diameter with flat precast manhole cover. Cover shall have 6' x 3' aluminum access hatch cover cast into flat manhole cover. Covers shall be as manufactured by California Concrete Pipe, or Teichert Pre-Cast, or approved equal. Flat manhole cover shall be placed but not sealed.

Manhole cover shall have aluminum hatch, Series S3R, access door as manufactured by Halliday Products or approved equal. Hatch shall include locking bar, recessed lock box with spring assisted hinges. Clear opening shall be 36" x 72" except where a smaller size is allowed by City.

Backfill shall be placed uniformly around the outside of manholes so as to not create differential forces and the possibility of dislodging the manhole sections.

15.08 Connection to Existing Sewer

The Contractor shall connect to existing sewer at the locations shown on the plans in accordance with the approved plans and these Improvement Standards. The Contractor shall pothole existing sewers at the proposed points of connection prior to the commencement of construction to verify existing flow line elevations, pipe size, and type. The Contractor shall seal all connections into manhole barrel by use of an approved seal as directed by the City Engineer.

15.09 Sewer Lateral Adjustment to Grade and Sewer Lateral Connection

Existing sewer laterals with a top of pipe elevation within 0.10 feet of any storm drain flow line, shall be adjusted to a lower grade as directed by the City Engineer. Adjusting sewer laterals to grade shall include excavating existing laterals for a distance of not more than three feet on either side of the storm drain centerline, cutting and removing existing sewer lateral, placing new 4" diameter sewer lateral on a grade sufficient to pass under the storm drain, and reconnecting lateral couplings sufficient to provide a water tight connection.

Contractor shall during the course of work maintain at all times, materials, equipment, and labor to adjust, connect, or repair sewer laterals which are encountered during the course of the work. All sewer laterals broken during the course of work shall be repaired within one hour of break or as directed by the City Engineer. Contractor shall use all diligence necessary to remove foreign material from laterals and sewer line prior to repair or adjustment.

Contractor shall locate, expose, and plug existing sanitary sewer laterals to be abandoned with an approved water tight plug and shall encase plug end in not less than one (1) cubic foot of Class 4 backfill or Class B concrete. Water tight plug shall be inspected by City prior to placing encasement.

15.10 Concrete Structures

Concrete structures (drainage inlets and junction boxes, headwalls, inlet and outlet structures) shall be constructed of Class A concrete and shall conform to the plans, the provisions in Section

51, "Concrete Structures," of the State Standard Specifications, and these Improvement Standards. Concrete structure reinforcement, when not set forth on plans, shall conform to Caltrans Standard Plan D89 for headwalls and Standard Plan D80 for box culvert sections.

Box culvert invert elevations shall be as directed by the City Engineer to match existing conditions.

Junction box covers on 36" diameter storm drains less than 4' deep shall be precast flat top manhole covers with cast in place manhole frames and shall be as manufactured by California Concrete Pipe or Teichert Pre-Cast. Flat top manhole covers shall be "park way" load rated and shall be of sufficient width to achieve not less than 6" of purchase on perimeter of junction box base.

All concrete structures shall have smooth trowel finish and rounded inlets at all openings. Drainage inlet, junction box combination structures shall pass full pipe flow in concrete channel.

Concrete structures in roadways shall be backfilled with Class 2 backfill compacted to not less than ninety-five percent (95%) relative compaction. Concrete structures off road or behind concrete curbs shall be backfilled with Class 3 backfill at not less than ninety percent (90%) relative compaction.

15.11 Miscellaneous Iron and Steel

Frames, grates, covers, and manhole riser rings shall conform to the provisions in Section 75, "Miscellaneous Metal," of the State Standard Specifications.

Manhole frames and covers shall be cast iron in accordance with ASTM A-48, Class 35B with H20 loading rating and shall be California Concrete Pipe Model A-640/A-1024 or approved equal.

Manhole covers shall have raised lettering not less than 1" spelling out "City of Jackson, Calif.," cast into cover and center of each manhole shall spell out "Sewer" or "Storm Drain" with 2" lettering or as approved by City Engineer.

15.12 Adjusting Utilities to Grade

Contractor shall adjust existing manhole frames, water valve boxes, and water meter boxes affected by his work to grade in accordance with these Improvement Standards.

Manholes shall be adjusted to grade with cast iron riser rings and asphalt concrete backfill. Riser rings shall conform to Section 75-1.02 of the State Standard Specifications and these Improvement Standards. Asphalt concrete shall conform with Section 13.09 except it can be hand placed.

16.00 STANDARD DETAILS: STREETS, STORMDRAIN, SEWER

Index of Standard Detail Drawings

STORM DRAIN DETAILS:

Drain Inlet Box SD-1
Storm Drain Manhole SD-2
Type "B" Storm Drain Manhole (for Potentially Flooded Locations) SD-3
Large Diameter Shallow Storm Drain Manhole SD-4
Storm Drain Outfall SD-5
Rainfall Intensity Chart SD-6
Under Walk Drain SD-7

SANITARY SEWER DETAILS:

Type "A" Manhole SS-1
Type "B" Manhole SS-2
Manhole Cover SS-3
Sewer Service Laterals SS-4
Property Line Cleanout SS-5
Cleanout Branch SS-6
Trench Details SS-7
Trench at High Groundwater SS-8
Peak Flow Factors SS-9
Grease Trap with Grease Sampling Box SS-10

STREET DETAILS:

Typical Urban Street Section ST-1
Typical Rural Street Section ST-1A
Standard Cul-de-Sac ST-2
Intersection Bulb ST-3
Curb, Gutter & Sidewalk ST-4
AC Dikes and Curb & Gutter ST-5
ADA Ramp ST-6
Typical Driveways ST-7
Residential Driveway Vertical Alignment ST-7A
Street name Sign ST-8
Standard Barricade ST-9
Typical Locations of Underground Utilities ST-10
Street Light ST-11
Street Light Details ST-12
Street Light Details ST-13

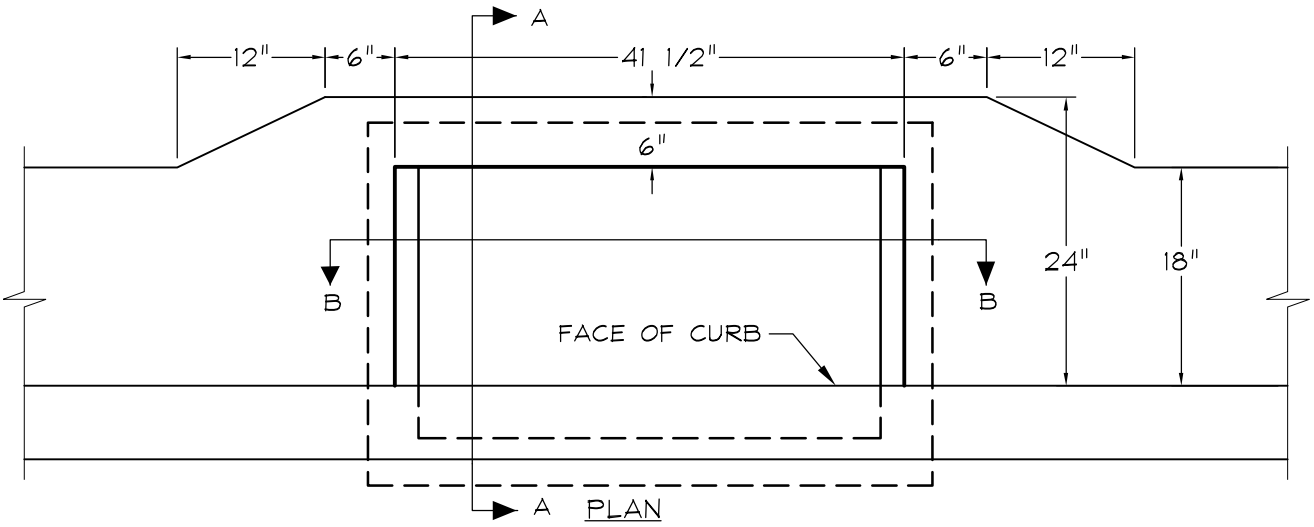

PLAN
NTS

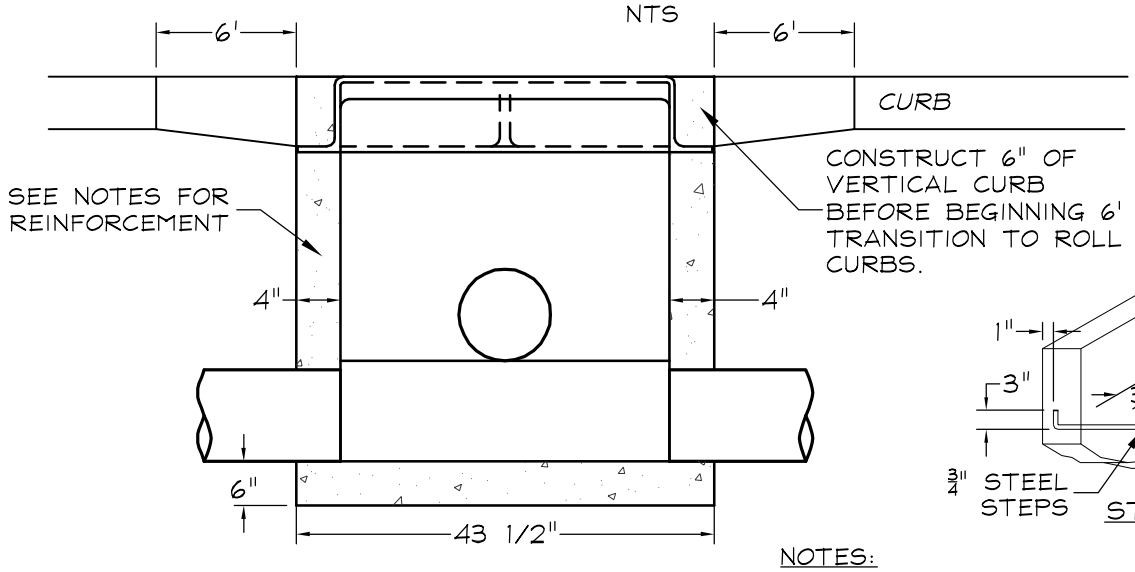

SECTION B-B
NTS

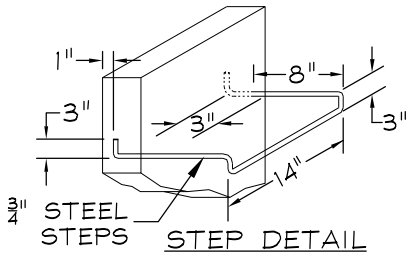

STEP DETAIL

NOTES:

1. REINFORCEMENT CAGE TO BE #4 BARS @ 12" O/C BOTH WAYS @ CENTER OF CONCRETE.
2. CONCRETE TO BE 3000 PSI @ 28 DAYS CL "A" PCC.
3. BOTTOM OF INLET SHALL BE PLACED PRIOR TO OR AT THE SAME TIME AS SIDE WALLS.
4. TEICHERT PRECAST G.O. SERIES DRAINAGE INLET OR EQUAL MAY BE USED. PRODUCT CODES:
   - VJL316 LID ASSEMBLY
   - VHG202 FRAME
   - VHF201 GRATE
   - VFF201 HEADER
5. FOR DROP INLETS GREATER THAN 4' DEEP FROM GUTTER FLOW LINE TO PIPE FLOW LINE, STEPS ARE REQUIRED. SEE STEP DETAIL.

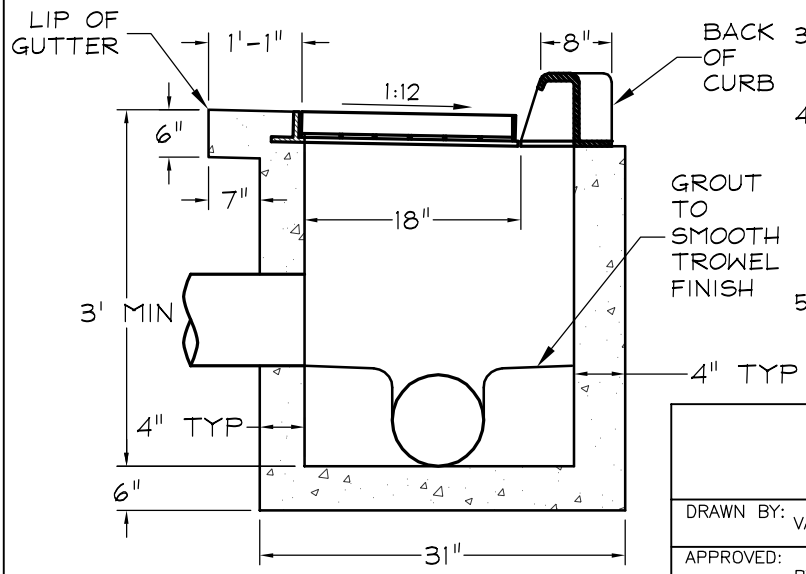

SECTION A-A
NTS

DRAIN INLET BOX			
DRAWN BY: VA	SCALE: N.T.S.	DRAWING NO.: SD-1	REV.:
APPROVED: RTW	DATE: JUNE 09		
CITY OF JACKSON			

NOTES:

1. ALL JOINTS BETWEEN PRECAST SECTIONS SHALL BE MORTARED, INSIDE AND OUTSIDE.
2. INTERIOR OF THE MANHOLE SHALL HAVE A SMOOTH TROWELED SURFACE.
3. MANHOLE COVER SHALL HAVE THE WORDS "STORM DRAIN" MOLDED INTO THE COVER, WITH PICK HOLE AND EDGE HOLE.
4. PIPES LARGER THAN 24" REQUIRE A SPECIAL DESIGN.
5. CONSTRUCT STORM DRAIN BOX WITH DECK AND KEY FOR PRECAST TAPERED CONE, FOR A FULL DECK BEARING. ALL CONSTRUCTION JOINTS TO BE APPROVED BY CITY ENGINEER.
6. REINFORCED CONCRETE GRADE RINGS, CONES, PIPE RISERS OR APPROVED PRECAST MANHOLE SECTIONS SHALL CONFORM TO CURRENT A.S.T.M. SPEC. No. C-478.

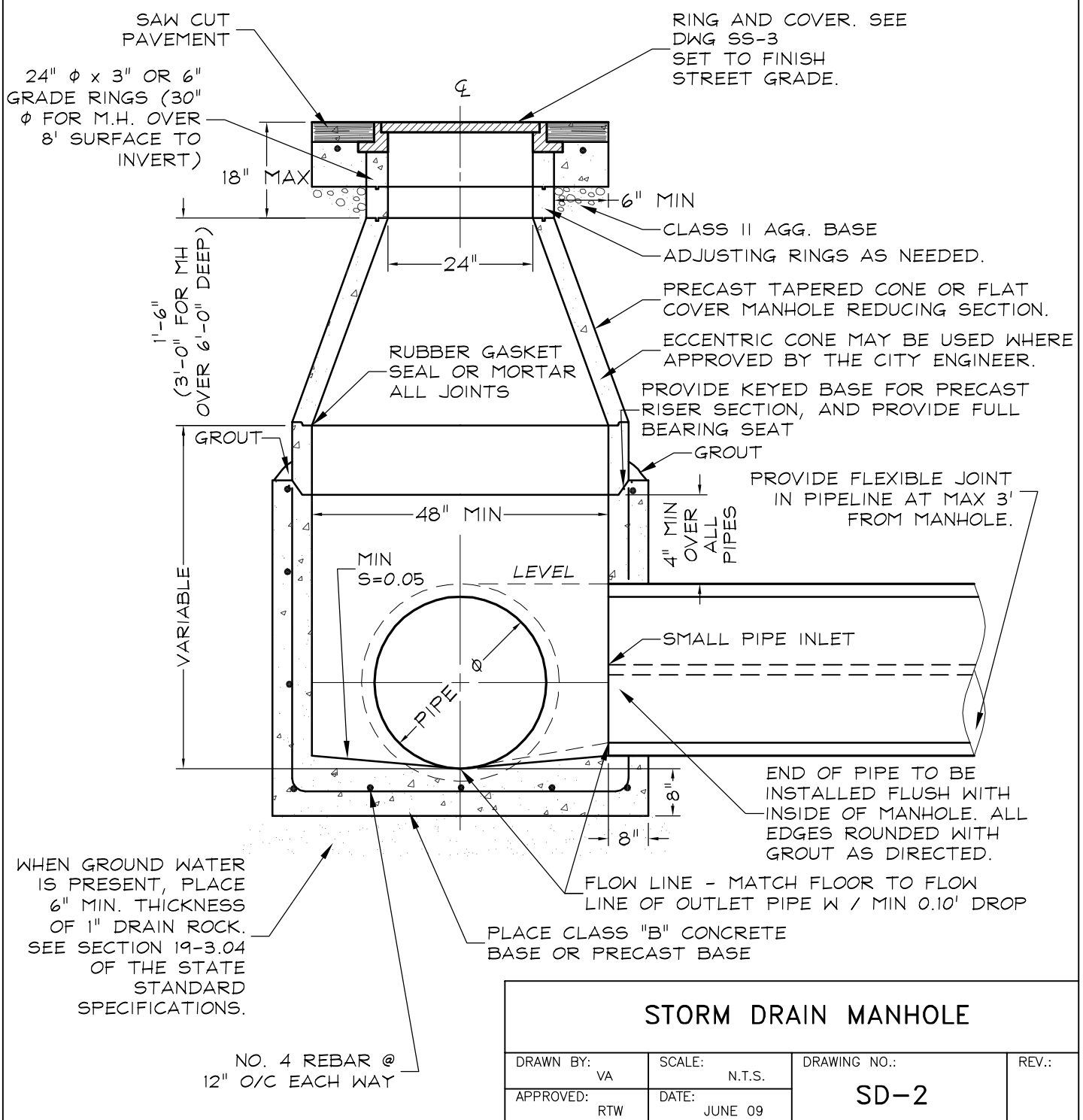

STORM DRAIN MANHOLE			
DRAWN BY: VA	SCALE: N.T.S.	DRAWING NO.: SD-2	REV.:
APPROVED: RTW	DATE: JUNE 09		
CITY OF JACKSON			

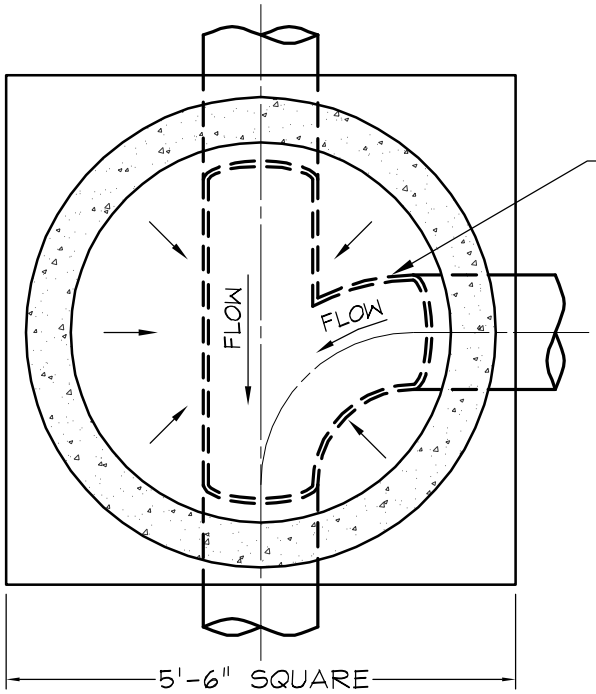

HAND FORM CONCRETE CHANNEL TO MATCH FLOW LINE OF THROUGH PIPE THEN TROWEL SMOOTH. THROUGH PIPE SHALL NOT BE OPENED UNTIL MANHOLE INTERIOR IS COMPLETE

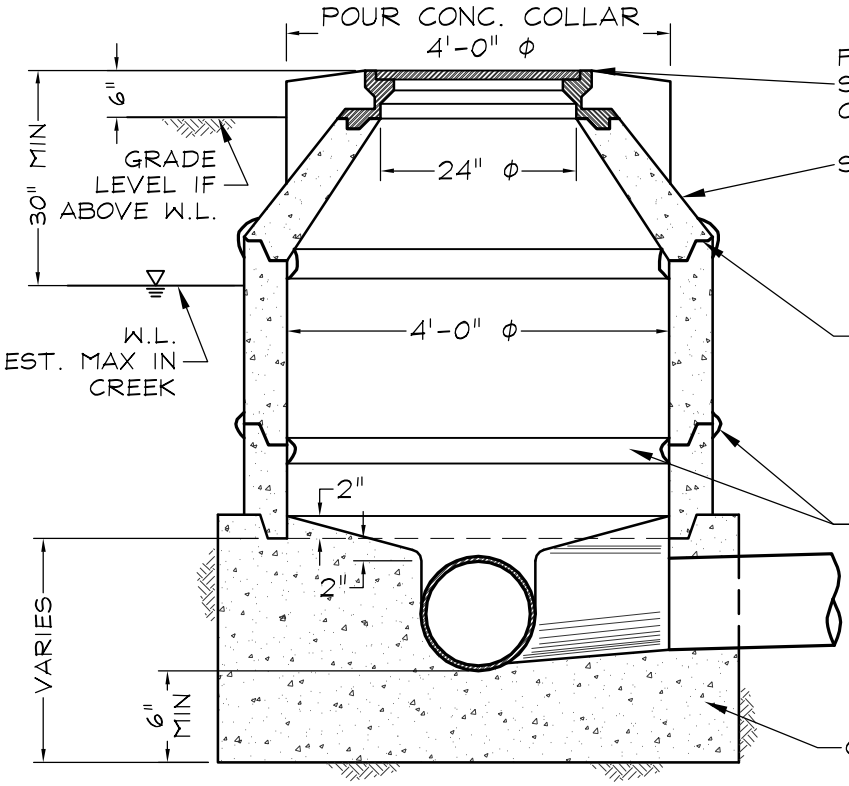

FRAME & COVER ASSEMBLY SHALL BE PINKERTON A-612-B.D. OR APPROVED EQUAL

SHORT CONCENTRIC CONE

ALL JOINTS (COVER FRAME, CONE PRECAST BARRELS, AND BASE) TO BE GROUTED WITH CONCRESIVE No. 3 MORTAR AS MANUFACTURED BY ADHESIVE ENGINEERING CO. OR APPROVED EQUAL. THE ACCOMPANYING MIXING AND APPLICATION INSTRUCTIONS ARE TO BE STRICTLY FOLLOWED.

GROUT EXTERIOR & INTERIOR BANDS AFTER ASSEMBLY

CLASS "A" CONCRETE FOR BASE

NOTES:

1. PRECAST CONCRETE MANHOLE BARREL UNITS MAY BE 1', 2', 3' UNITS, AND SHALL CONFORM TO ASTM SPECIFICATION C478

TYPE "B" STORM DRAIN MANHOLE (FOR POTENTIALLY FLOODED LOCATIONS)			
DRAWN BY: VA	SCALE: N.T.S.	DRAWING NO.: SD-3	REV.:
APPROVED: RTW	DATE: JUNE 09		
CITY OF JACKSON			

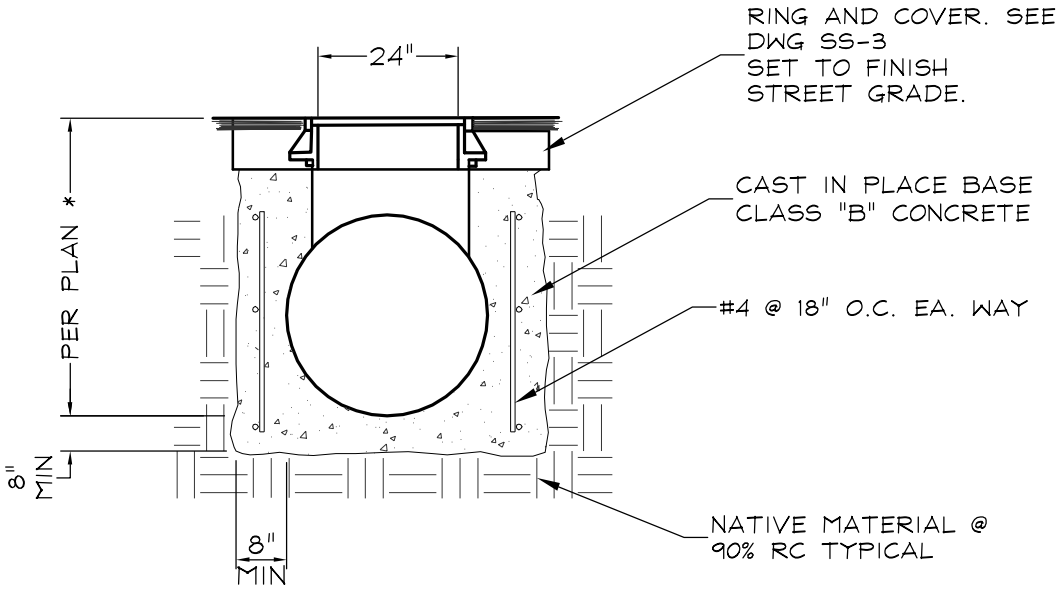

* VARIES TO ADJUST RIM ELEV.

LARGE DIAMETER
SHALLOW STORM DRAIN MANHOLE
NTS

LARGE DIAMETER SHALLOW STORM DRAIN MANHOLE			
DRAWN BY: VA	SCALE: N.T.S.	DRAWING NO.: SD-4	REV.:
APPROVED: RTW	DATE: JUNE 09		
CITY OF JACKSON			

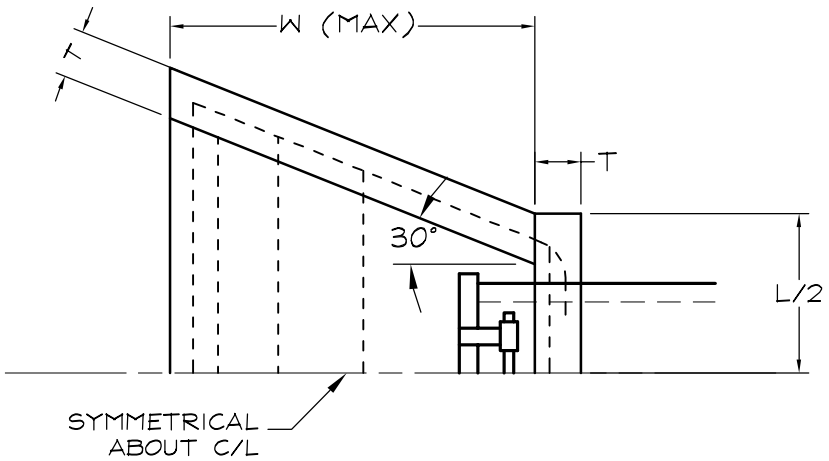

PLAN

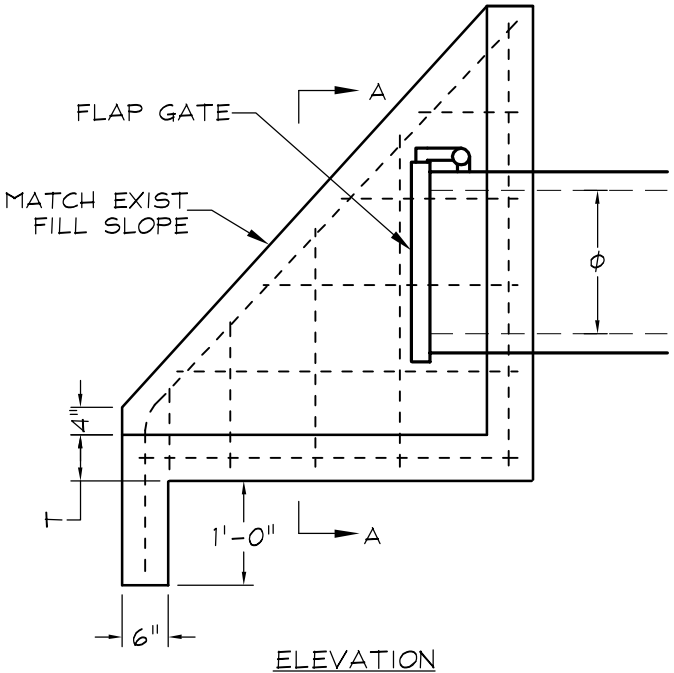

ELEVATION

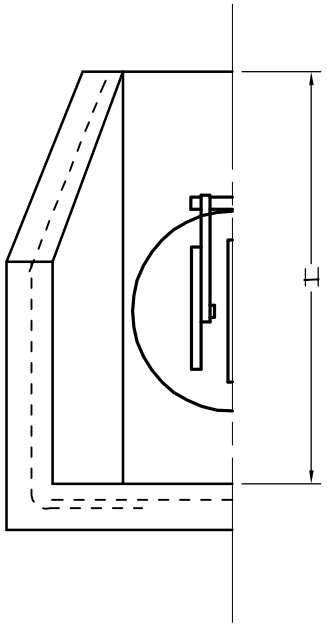

HALF SECTION A-A

NOTES:

1. REINFORCING BAR SPACING & HEAD WALL DIMENSIONS SHALL COMPLY WITH SSP D89 OR AS APPROVED BY CITY ENGINEER.

STORM DRAIN OUTFALL			
DRAWN BY: VA	SCALE: N.T.S.	DRAWING NO.: SD-5	REV.:
APPROVED: RTW	DATE: JUNE 09		
CITY OF JACKSON			

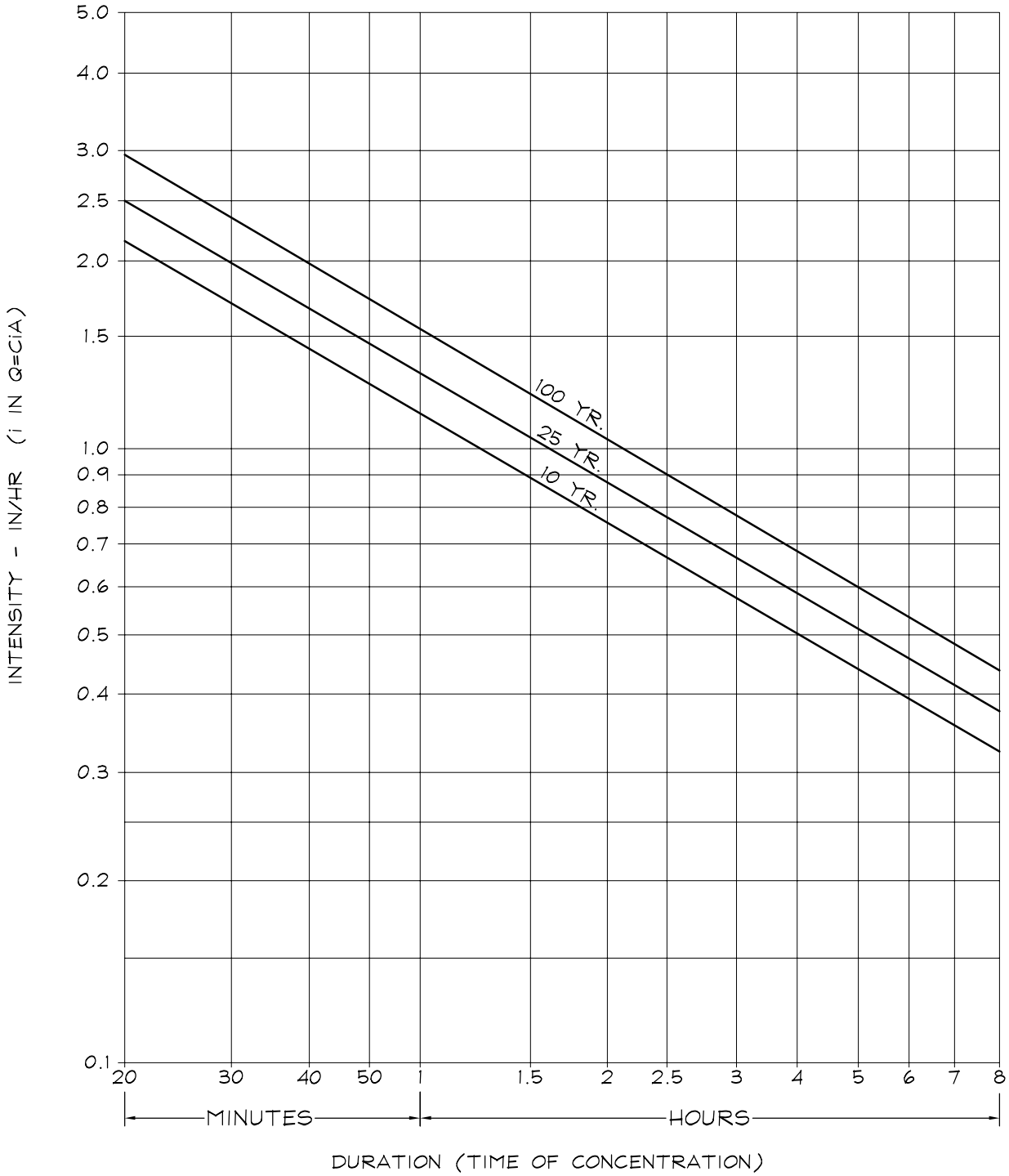

TIME OF CONCENTRATION (t_c) MAY BE ESTIMATED BY USING DEPARTMENT OF INTERIOR EQUATION:

$$t_c = \frac{1.8(1.1-C)\sqrt{D}}{\sqrt[3]{S}}$$

C = RUNOFF COEFF.
D = REACH (FT)
S = SLOPE (%)

(MIN t_c MAY BE TAKEN AS 20 MINUTES)

RAINFALL INTENSITY CHART

DRAWN BY: VA	SCALE: N.T.S.	DRAWING NO.: SD-6	REV.:
APPROVED: RTW	DATE: JUNE 09		

CITY OF JACKSON

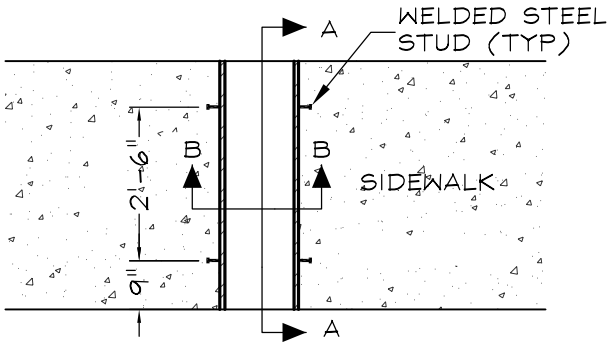

PLAN VIEW

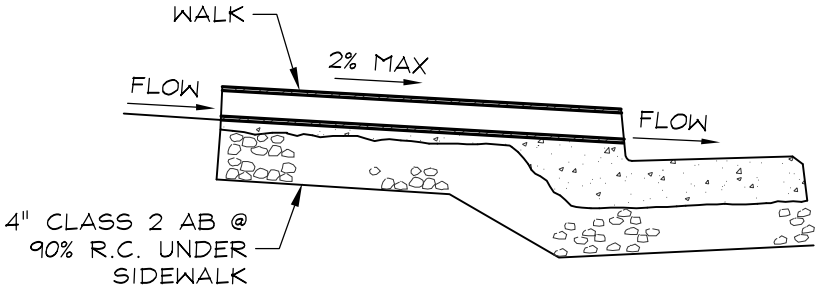

SECTION AA

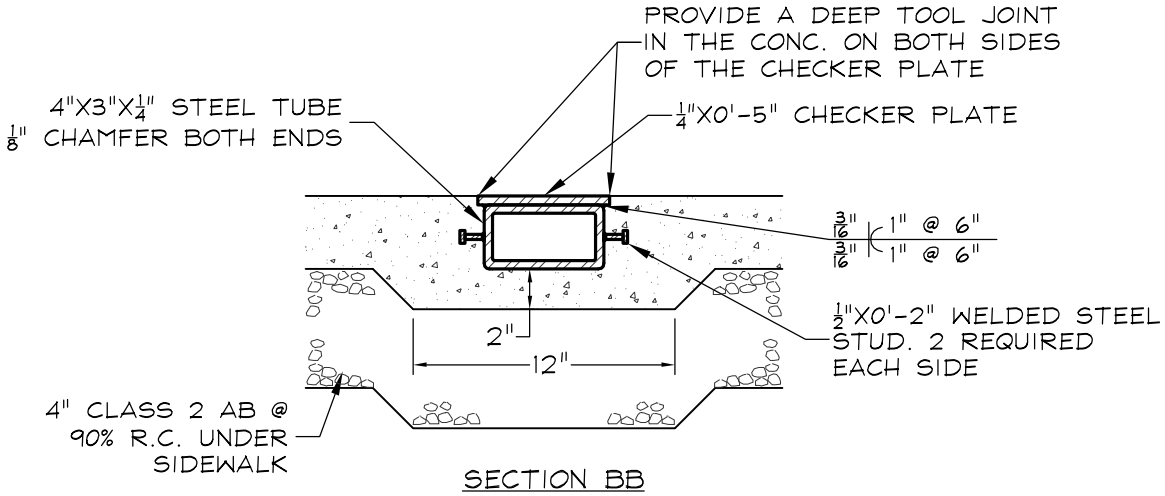

SECTION BB

NOTES:
1. GALVANIZE AFTER FABRICATION.

UNDER WALK DRAIN			
DRAWN BY: VA	SCALE: N.T.S.	DRAWING NO.: SD-7	REV.:
APPROVED: RTW	DATE: JULY 09		
CITY OF JACKSON			

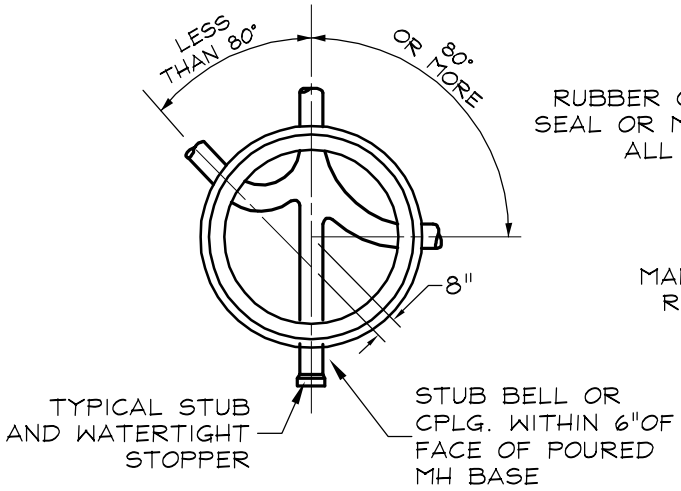

MH BASE W/ INTERSECTING SEWERS
PLAN VIEW
NTS

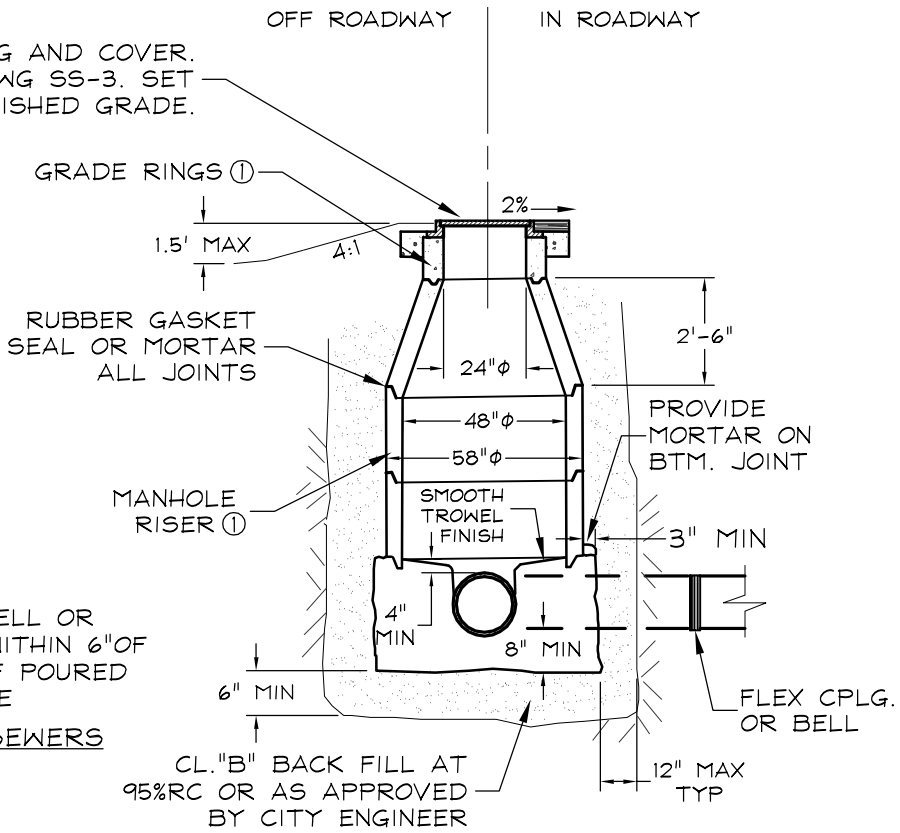

ELEVATION
NTS

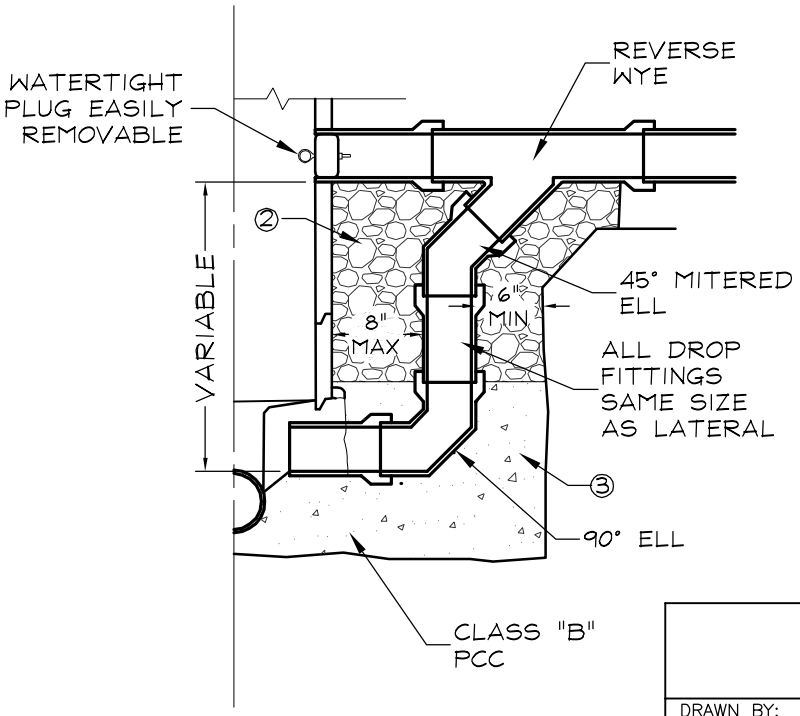

DROP CONNECTION
NTS

NOTES:

① REINFORCED CONCRETE GRADE RINGS, CONES, PIPE RISERS OR APPROVED PRECAST MANHOLE SECTIONS SHALL CONFORM TO CURRENT A.S.T.M. SPEC. No. C-478.

② SELECT IMPORT MATERIAL, 100% PASSING ¾" SIEVE & 50% MINIMUM SAND EQUIVALENT.

③ ENCASEMENT CONCRETE SHALL BE PLACED AGAINST UNDISTURBED EARTH.

4. ALL INLETS AND OUTLETS FROM MANHOLE STRUCTURES SHALL HAVE A FLEXIBLE JOINT WITHIN 2 FEET OF THE STRUCTURE.

TYPE "A" MANHOLE			
DRAWN BY: VA	SCALE: N.T.S.	DRAWING NO.: SS-1	REV.:
APPROVED: RTW	DATE: JUNE 09		
CITY OF JACKSON			

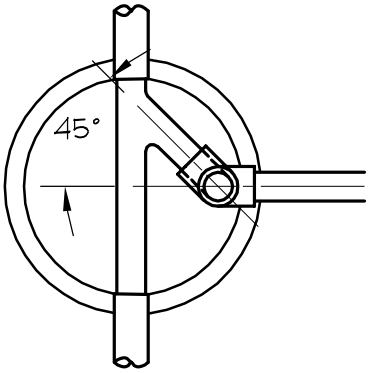

PLAN VIEW
NTS

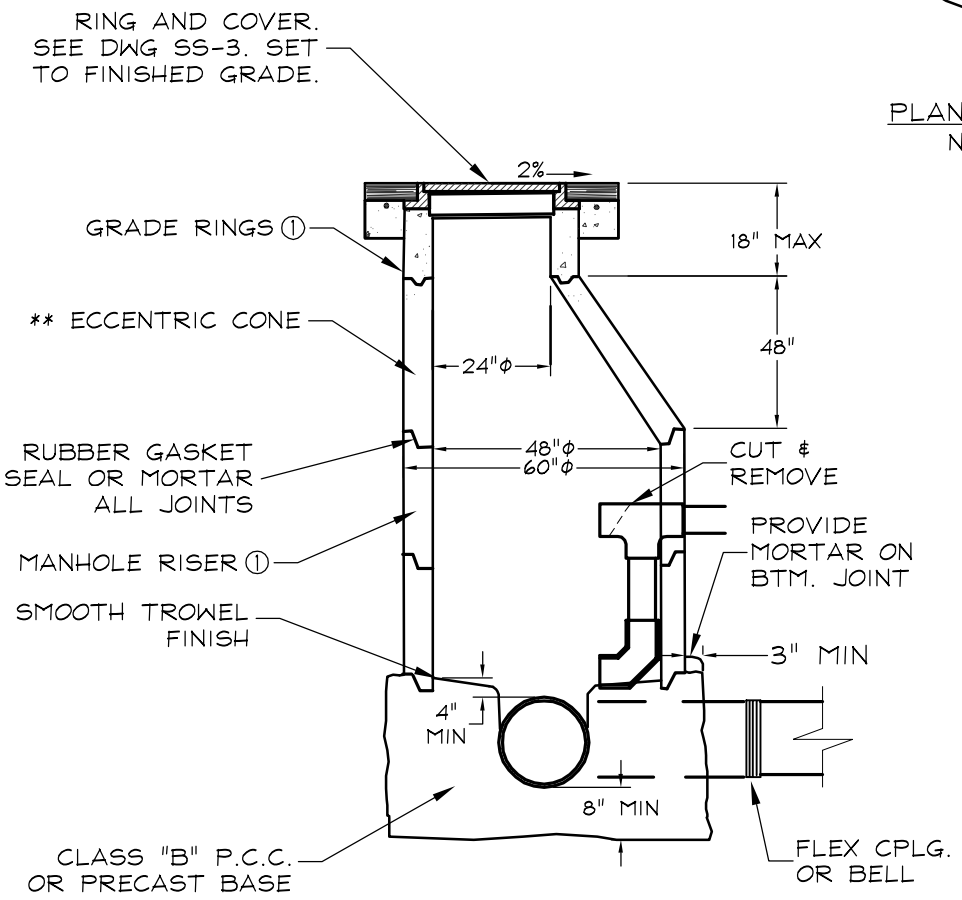

**ECCENTRIC CONE WHERE REQUIRED SHALL BE ORIENTED WITH VERTICAL SIDE DOWN STREAM

ELEVATION
NTS

NOTES:

1. REINFORCED CONCRETE GRADE RINGS, CONES, PIPE RISERS OR APPROVED PRECAST MANHOLE SECTIONS SHALL CONFORM TO CURRENT A.S.T.M. SPEC. No. C-478.
2. CONCRETE COLLAR IN ROADWAY

TYPE "B" MANHOLE			
DRAWN BY: VA	SCALE: N.T.S.	DRAWING NO.: SS-2	REV.:
APPROVED: RTW	DATE: FEB 2010		
CITY OF JACKSON			

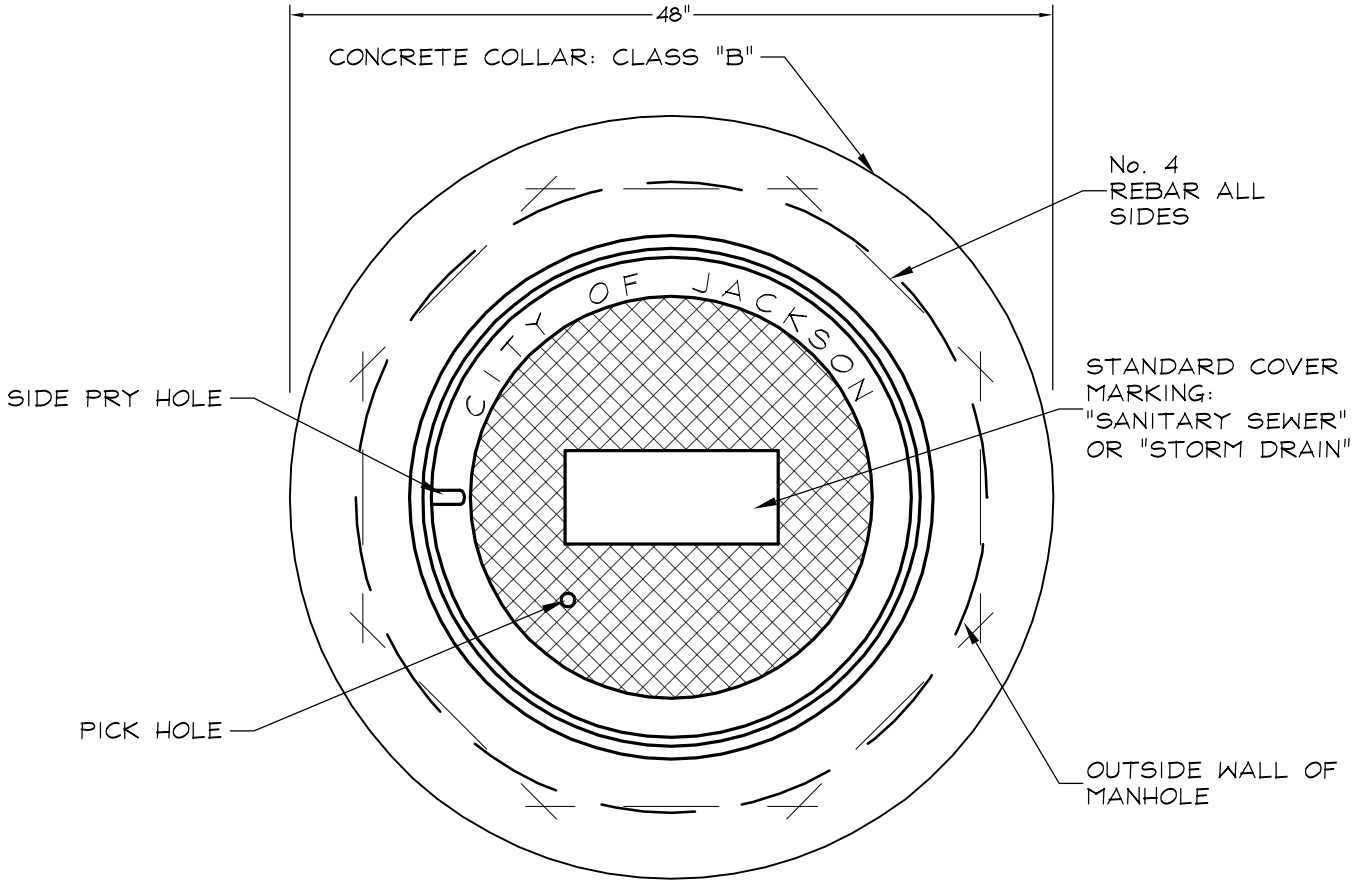

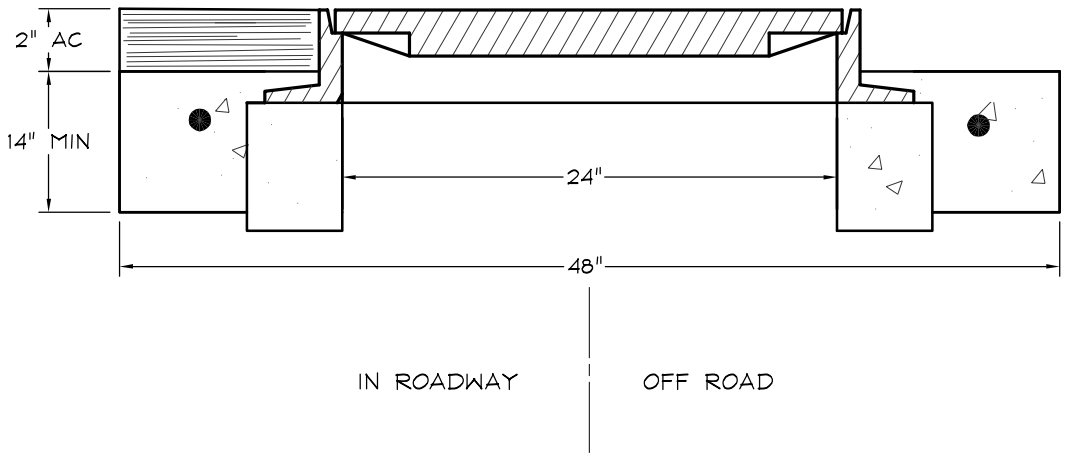

NOTES:

1. STANDARD MANHOLE COVER AND FRAME SHALL BE CALIFORNIA CONCRETE PIPE A-640/A-1024 OR EQUAL.
2. ALL CONTACT SURFACES TO BE MACHINED.
3. A HIGH STRENGTH TRAFFIC COVER MAY BE REQUIRED IN AREAS AS DETERMINED BY CITY ENGINEER.

MANHOLE COVER			
DRAWN BY: VA	SCALE: N.T.S.	DRAWING NO.: SS-3	REV.:
APPROVED: RTW	DATE: JUNE 09		
CITY OF JACKSON			

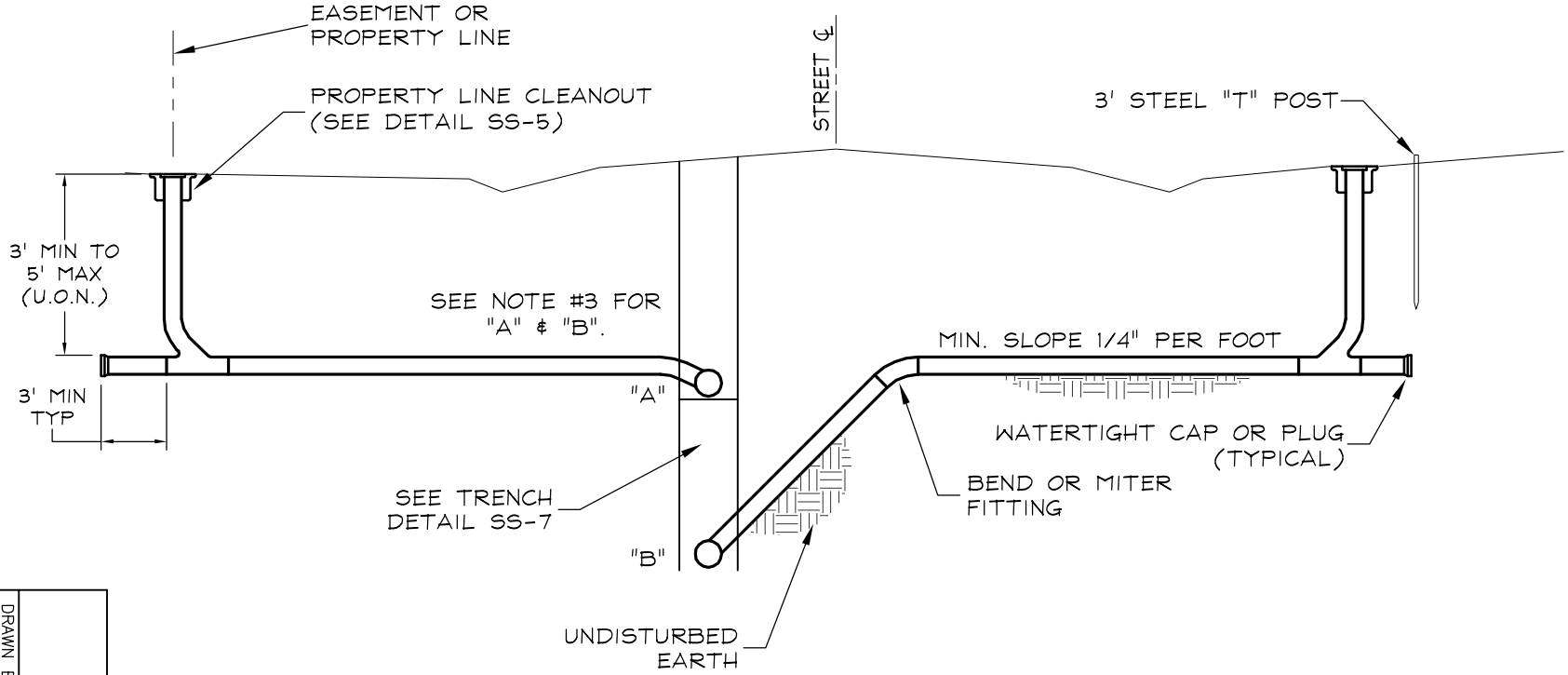

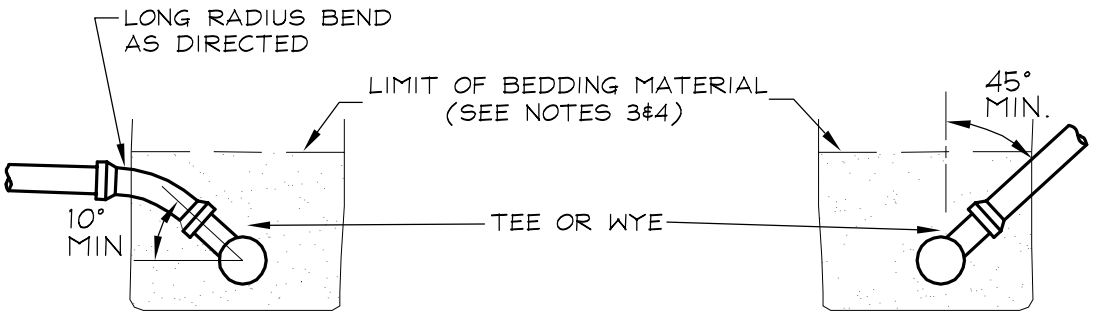

TYPE "A"

TYPE "B"

NOTES:

1. ALL SERVICE LINES SHALL BE 4" INSIDE ϕ UNLESS OTHERWISE NOTED.
2. SERVICE SEWER SHALL HAVE MINIMUM 3' COVER AT PROPERTY LINE.
3. PLACE CONCRETE 12" WIDE OR WELL COMPACTED BEDDING MATERIAL 18" WIDE UNDER THE TEE BRANCH, AS DIRECTED. WHEN BEDDING MATERIAL IS USED, PLACE ADDITIONAL BEDDING MATERIAL TO TOP OF BEND, THE FULL WIDTH OF THE TRENCH.
4. BEDDING MATERIAL SHALL BE CLASS 1 BACK FILL IN ACCORDANCE WITH CITY STANDARDS.

DRAWN BY: VA	SCALE: N.T.S.	DRAWING NO.: SS-4	REV.:
APPROVED: RTW	DATE: JUNE 09		

SEWER SERVICE LATERALS

CITY OF JACKSON

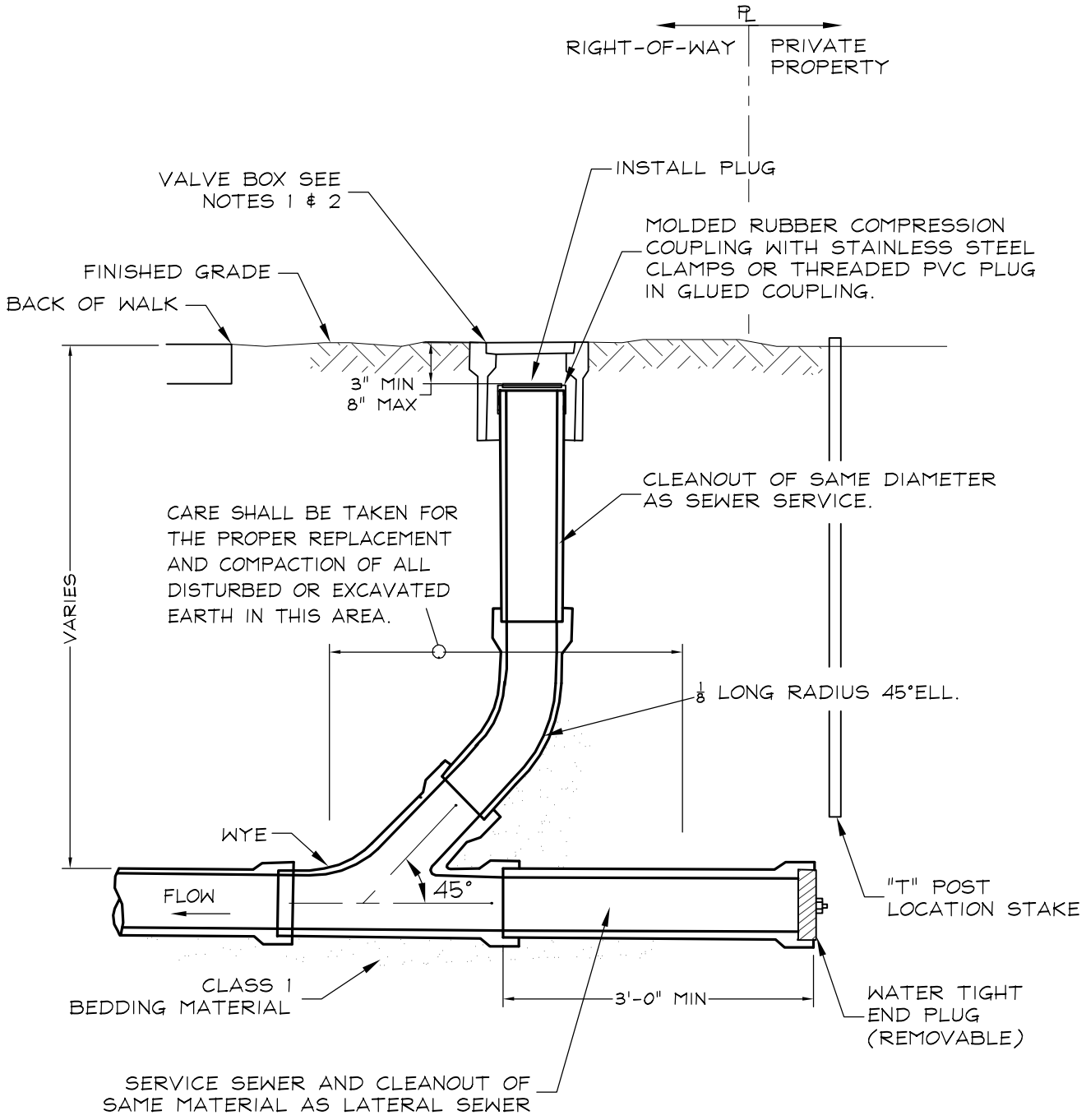

NOTES:

1. FOR 4" SERVICES, INSTALL ROUND CONCRETE VALVE BOX AND COVER, MARKED "SEWER". INSIDE BOX DIAMETER 7" MINIMUM, 10" MAXIMUM. (TRAFFIC RATED IN DRIVEWAY)
2. FOR SERVICES 6" OR LARGER, INSTALL "CLEANOUT BRANCH." SEE STANDARD DRAWING SS-6.

PROPERTY LINE CLEANOUT			
DRAWN BY: VA	SCALE: N.T.S.	DRAWING NO.: SS-5	REV.:
APPROVED: RTW	DATE: JUNE 2010		
CITY OF JACKSON			

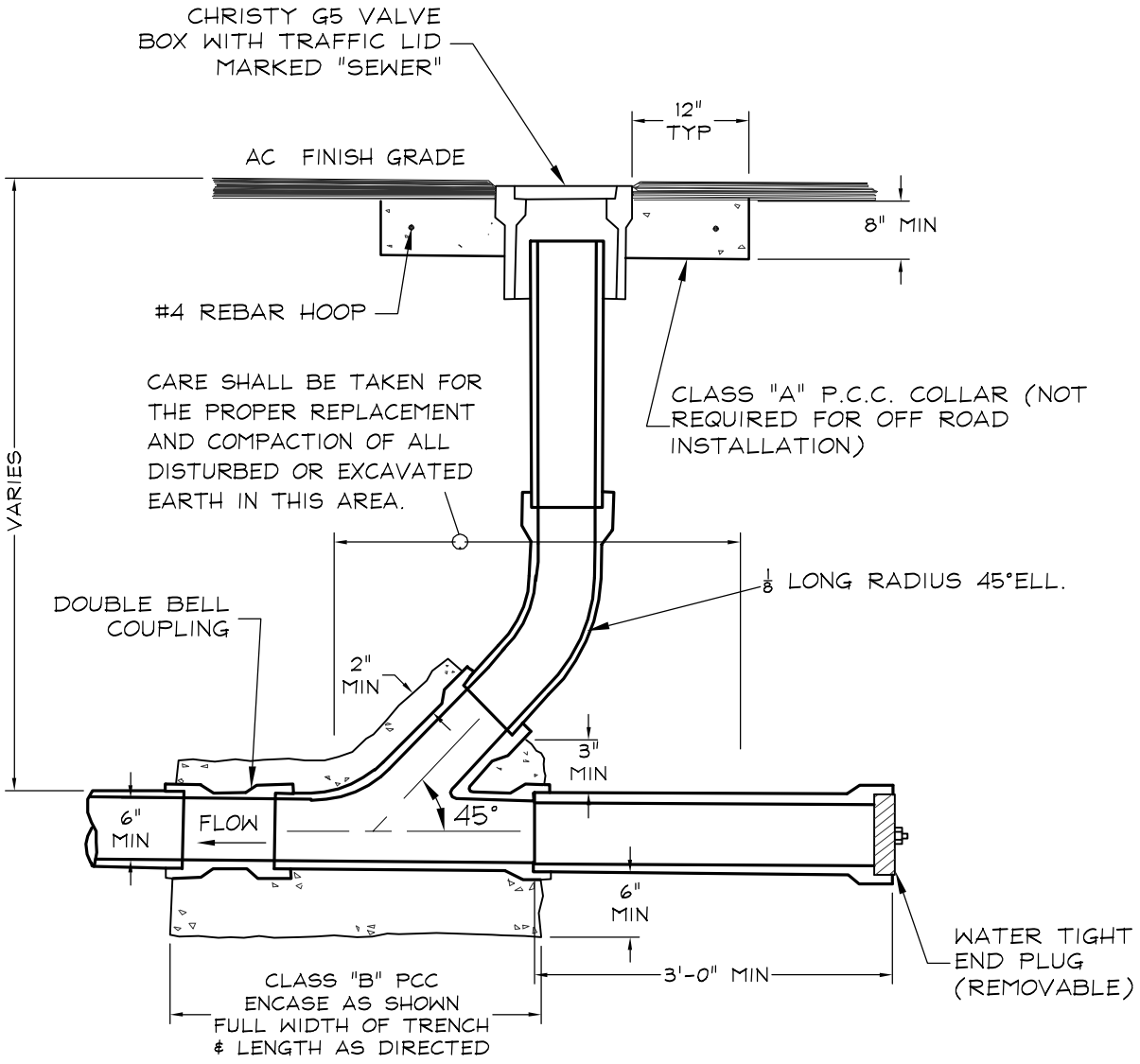

CLEANOUT BRANCH			
DRAWN BY: VA	SCALE: N.T.S.	DRAWING NO.: SS-6	REV.:
APPROVED: RTW	DATE: JUNE 2010		
CITY OF JACKSON			

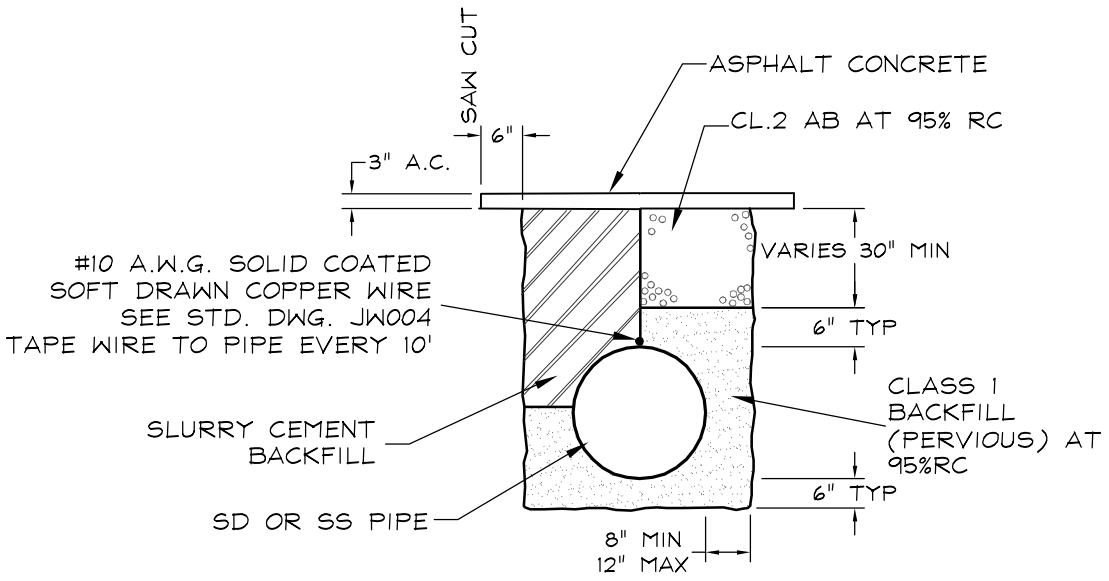

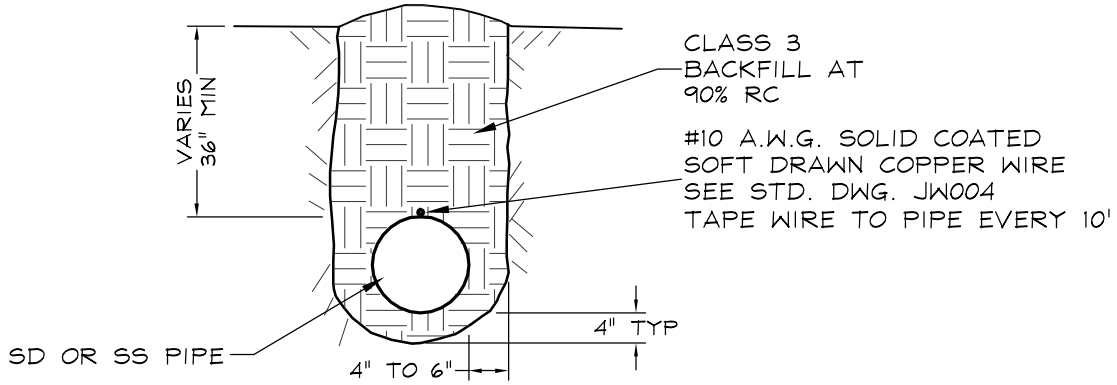

OFF ROAD TRENCH

NOTES:

1. SANITARY SEWER TRENCH DEPTH CONTROLLED BY SS-4 & JOINT TRENCH LOCATION.
2. STORM DRAIN DEPTH 36" MIN OR AS DIRECTED BY CITY.
3. SAW CUT EXISTING PAVEMENT BEFORE EXCAVATING.
4. PERCENT COMPACTION SHALL BE RELATIVE TO THE STANDARD LABORATORY CURVE DERIVED BY ASTM TEST METHOD D1557.

TRENCH DETAILS			
DRAWN BY: VA	SCALE: N.T.S.	DRAWING NO.: SS-7	REV.:
APPROVED: RTW	DATE: JULY 09		
CITY OF JACKSON			

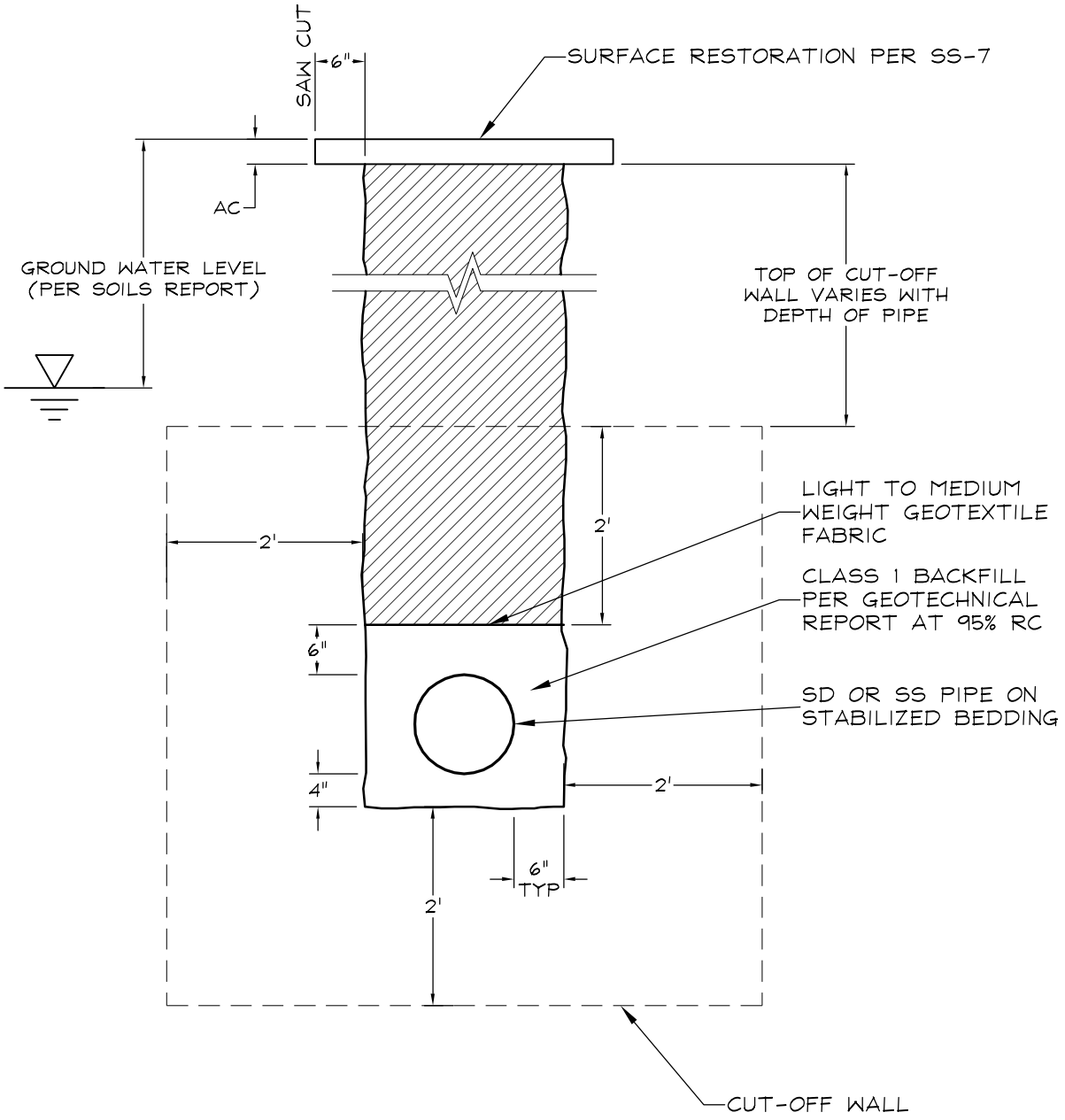

NOTES:

1. CUT OFF WALL SHALL BE MIN. 12" THICK SLURRY CEMENT @ 500' MAX. SPACING.

TRENCH AT HIGH GROUNDWATER			
DRAWN BY: VA	SCALE: N.T.S.	DRAWING NO.: SS-8	REV.:
APPROVED: RTW	DATE: JUNE 09		
CITY OF JACKSON			

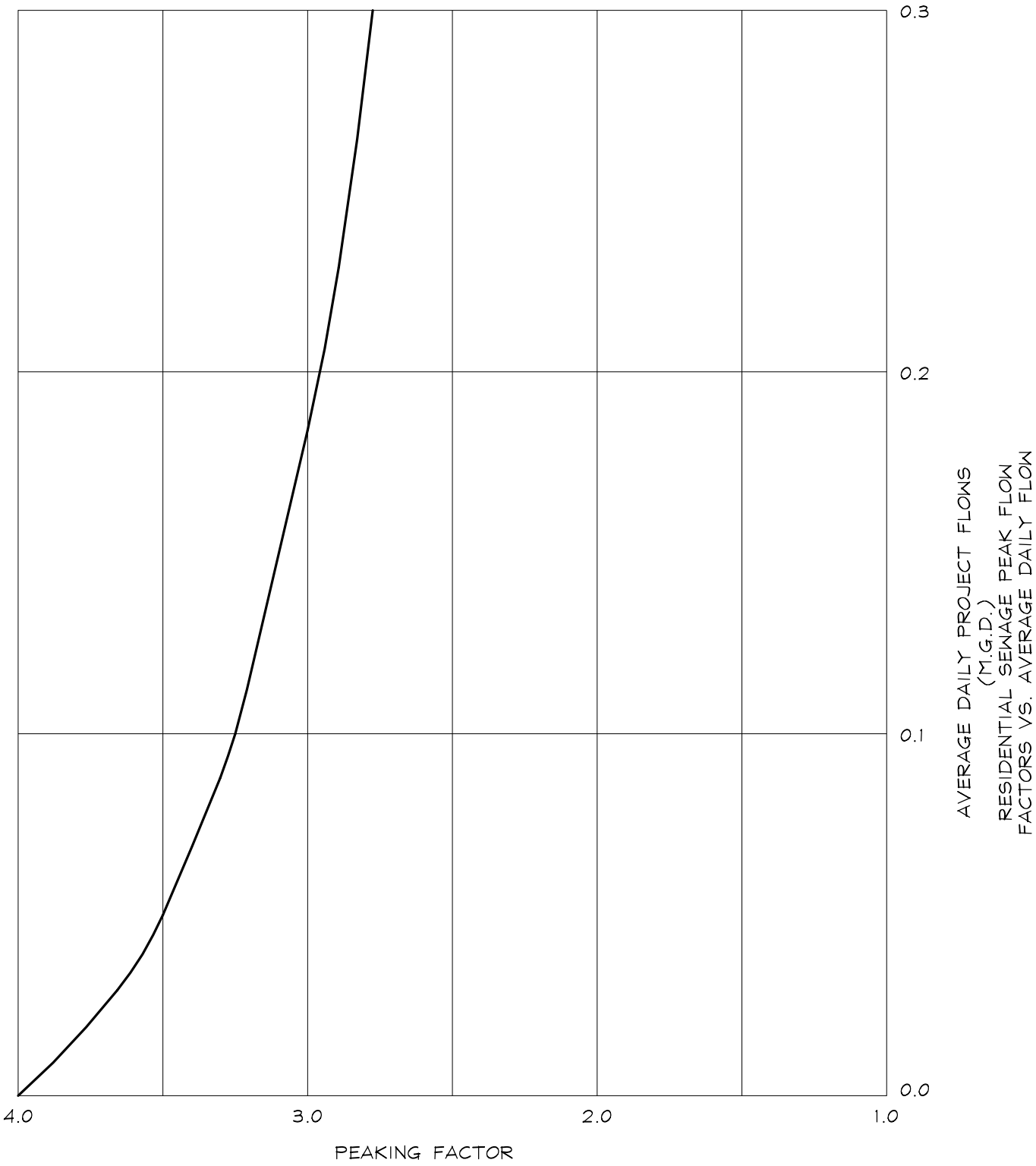

PEAK FLOW FACTORS			
DRAWN BY: VA	SCALE: N.T.S.	DRAWING NO.: SS-9	REV.:
APPROVED: RTW	DATE: JUNE 09		
CITY OF JACKSON			

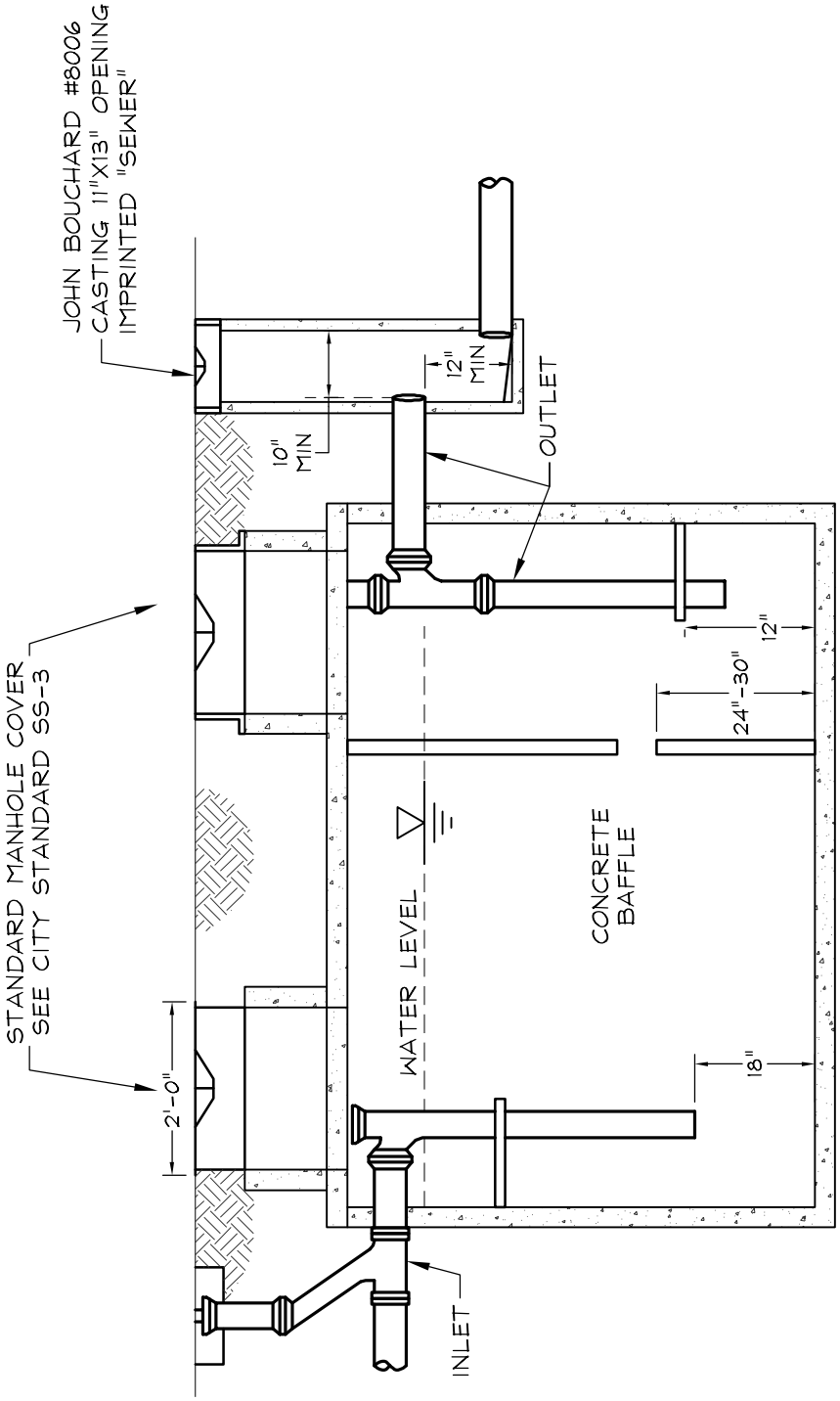

NOTES:

1. GREASE TRAP SHALL HAVE 1,200 GALLONS MINIMUM CAPACITY.
2. DRAWING IS SCHEMATIC. GREASE TRAP STRUCTURES SHALL BE DESIGNED BY QUALIFIED PROFESSIONAL FOR INDIVIDUAL PROJECTS.
3. DESIGN FOR H-20 LOADING WHERE LOCATED IN THE TRAVELED WAY.
4. ALL INLETS AND OUTLETS FROM GREASE TRAP STRUCTURES SHALL HAVE A FLEXIBLE JOINT WITHIN 2 FEET OF THE STRUCTURE.

GREASE TRAP WITH GREASE SAMPLING BOX			
DRAWN BY: VA	SCALE: N.T.S.	DRAWING NO.: SS-10	REV.:
APPROVED: RTW	DATE: JUNE 2010		
CITY OF JACKSON			

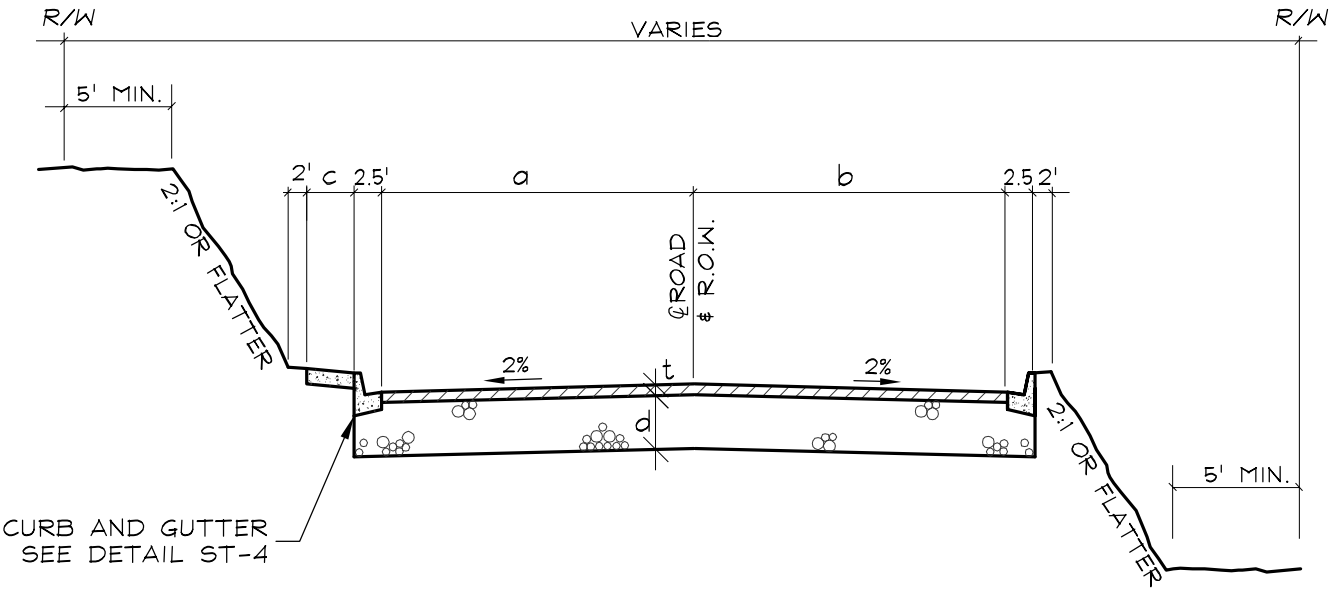

NOTES:

1. SUBGRADE AND AGGREGATE BASE UNDER CURB, GUTTER, AND STREET ARE TO BE COMPACTED AT 95%.

2. PAVEMENT SECTION DESIGN SHALL BE BASED ON "R" VALUE AND SHALL BE APPROVED BY CITY ENGINEER. BASE THICKNESS SHALL BE 6 INCH MIN.

TYPE STREET	PARKING	TYPICAL SECTION				STRUCTURAL SECTION		
		MIN R/W	(a)	(b)	(c)	t (1)	T.I.	d (min)
ARTERIAL(3)	NONE	80'	24'	24'	5'	4"	7.0	12"
COLLECTOR	BOTH SIDES	60'	20'	20'	5'	3.5"	6.0	11"
	ONE SIDE	56'	20'	16'	5'	3.5"	6.0	11"
	NONE	52'	16'	16'	5'	3.5"	6.0	11"
LOCAL	BOTH SIDES	50'	16'	16'	4'	3"	5.5	10"
	ONE SIDE	46'	16'	12'	4'	3"	5.5	10"
	NONE	42'	12'	12'	4'	3"	5.5	10"

NOTES:

1. ADDITIONAL THICKNESS MAY BE REQUIRED WHERE R-VALUE TESTS SHOW POOR SUBGRADE MATERIALS.

2. FOR CURB, GUTTER AND SIDEWALK DETAILS, REFER TO STANDARD ST-4.

3. FOR ARTERIALS a & b MAY VARY & SEPARATED LANES ARE ENCOURAGED.

4. SLOPE EASEMENT REQUIRED WHERE CUT OR FILL SLOPES OCCUR OUTSIDE R.O.W.

TYPICAL URBAN STREET SECTION

DRAWN BY: VA	SCALE: N.T.S.	DRAWING NO.: ST-1	REV.:
APPROVED: RTW	DATE: JUNE 09		

CITY OF JACKSON

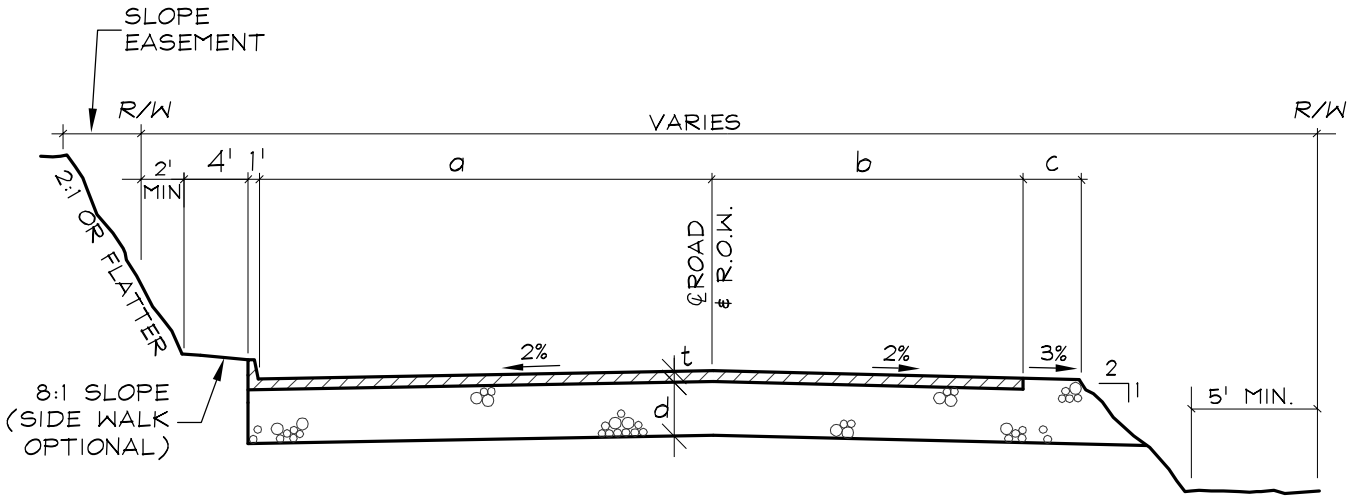

NOTES:

1. SUBGRADE AND AGGREGATE BASE UNDER CURB, GUTTER, AND STREET ARE TO BE COMPACTED AT 95%.

2. PAVEMENT SECTION DESIGN SHALL BE BASED ON "R" VALUE AND SHALL BE APPROVED BY CITY ENGINEER. BASE THICKNESS SHALL BE 6 INCH MIN.

TYPE STREET	PARKING	TYPICAL SECTION				STRUCTURAL SECTION		
		MIN R/W	(a)	(b)	(c)	t (1)	T.I.	d (min)
ARTERIAL(3)	NONE	80'	24'	24'	5'	4"	7.0	12"
COLLECTOR	BOTH SIDES	60'	20'	20'	4'	3.5"	6.0	11"
	ONE SIDE	56'	20'	13'	4'	3.5"	6.0	11"
	NONE	52'	15'	15'	4'	3.5"	6.0	11"
LOCAL	BOTH SIDES	50'	18'	16'	3'	3"	5.5	10"
	ONE SIDE	46'	18'	10'	3'	3"	5.5	10"
	NONE	42'	13'	13'	3'	3"	5.5	10"

NOTES:

1. ADDITIONAL THICKNESS MAY BE REQUIRED WHERE R-VALUE TESTS SHOW POOR SUBGRADE MATERIALS.

2. AC DIKE SUBJECT TO CITY ENGINEER APPROVAL

3. FOR ARTERIALS a ¢ b MAY VARY ¢ SEPARATED LANES ARE ENCOURAGED.

4. SLOPE EASEMENT REQUIRED WHERE CUT OR FILL SLOPES OCCUR OUTSIDE R.O.W.

TYPICAL RURAL STREET SECTION

DRAWN BY: VA	SCALE: N.T.S.	DRAWING NO.: ST-1A	REV.:
APPROVED: RTW	DATE: JUNE 09		

CITY OF JACKSON

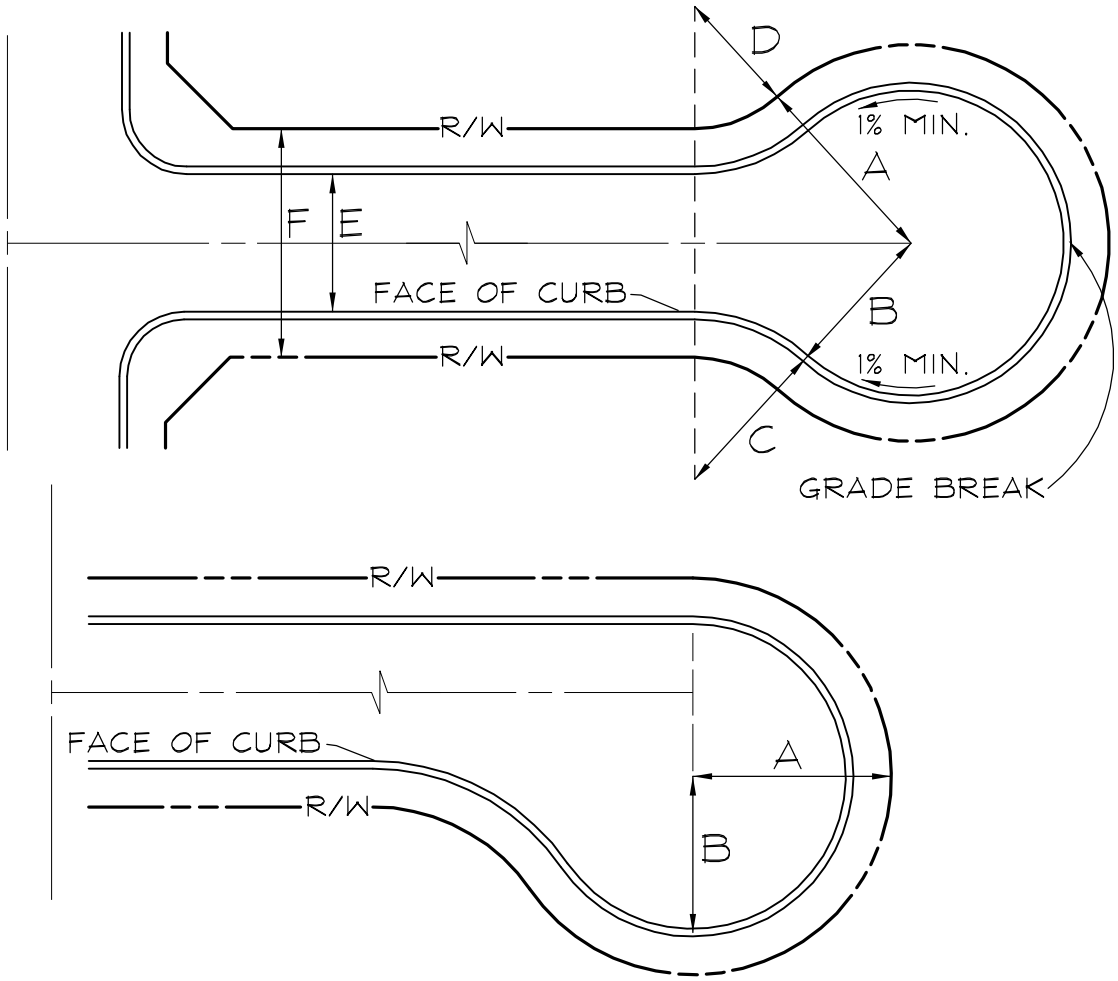

TABLE OF DIMENSIONS					
A	B	C	D	E	F
52'	42'	32'	20'	36'	50'

NOTES:

1. NO MORE THAN 20 SINGLE FAMILY RESIDENCES MAY BE SERVED BY A CUL-DE-SAC STREET (OR A TEMPORARY DEAD-END STUBBED STREET).
2. DIMENSION E & F SUBJECT TO SPECIFIC PROJECT APPROVAL.
3. 500' MAXIMUM LENGTH TO CENTERLINE OF INTERSECTING STREET.
4. GUTTER SLOPE AROUND CUL-DE-SAC SHALL BE 0.005 FT/FT MINIMUM.
5. BULB DIAMETER TO BE 104' AT PROPERTY LINE.

STANDARD CUL-DE-SAC			
DRAWN BY: VA	SCALE: N.T.S.	DRAWING NO.: ST-2	REV.:
APPROVED: RTW	DATE: JUNE 09		
CITY OF JACKSON			

P_1 = CENTER FOR CURB & R/W ARCS
P_2 = CENTER FOR ℄ ARC

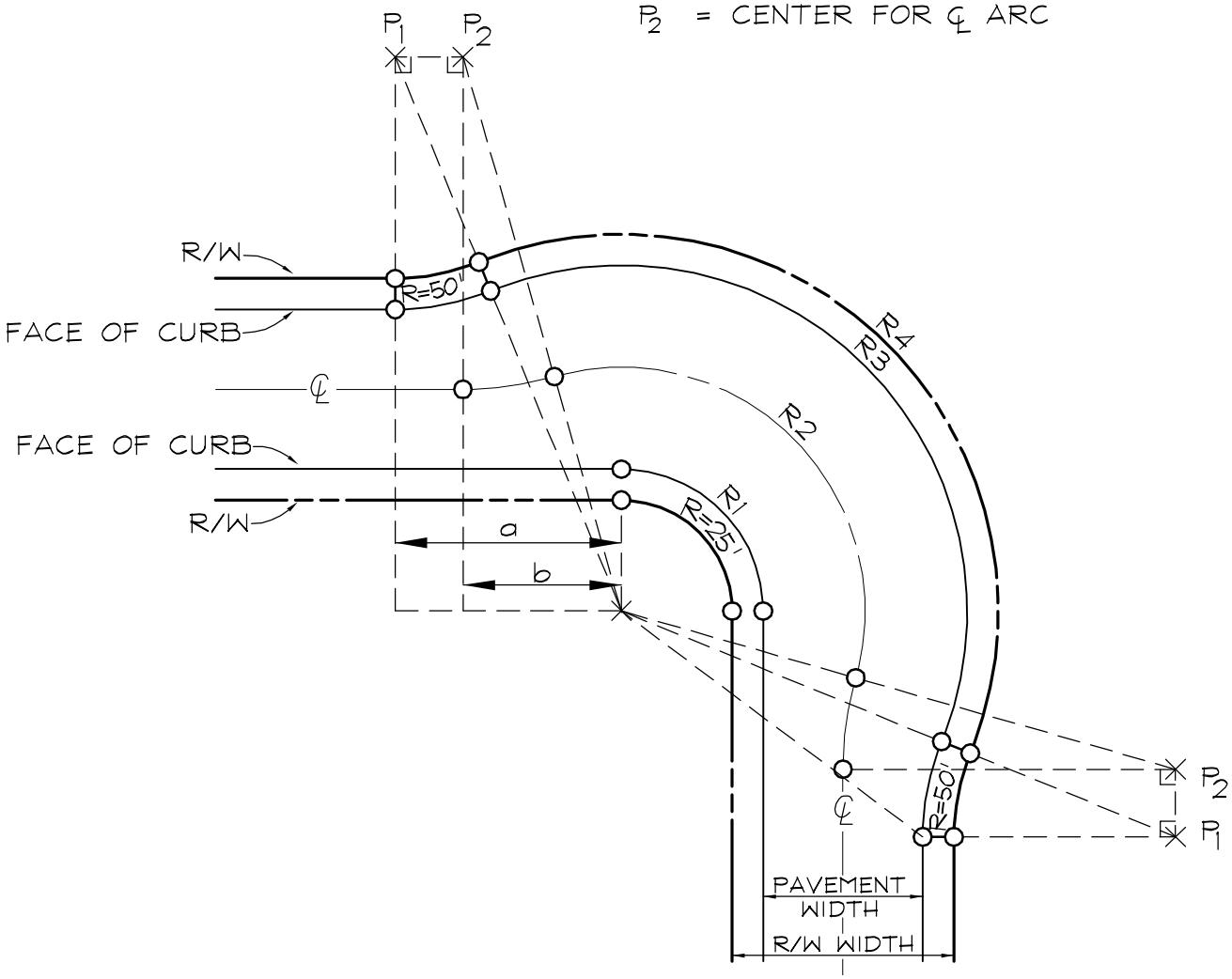

R/W WIDTH	PAVEMENT WIDTH	R_1 CURB	R_2 ℄	R_3 CURB	R_4 R/W	a	b	P_1 TO P_2
60'	40'	35'	60'	85'	95'	52.91'	37.10'	15.81'
50'	32'	25'	60'	79'	85'	62.91'	47.10'	15.81'

NOTE: KNUCKLE DIMENSIONS TO VARY PROPORTIONALLY WITH OTHER R/W AND PAVEMENT WIDTHS. OTHER R/W & PAVEMENT WIDTHS SUBJECT TO APPROVAL OF CITY ENGINEER.

INTERSECTION BULB			
DRAWN BY: VA	SCALE: N.T.S.	DRAWING NO.: ST-3	REV.:
APPROVED: RTW	DATE: JUNE 09		
CITY OF JACKSON			

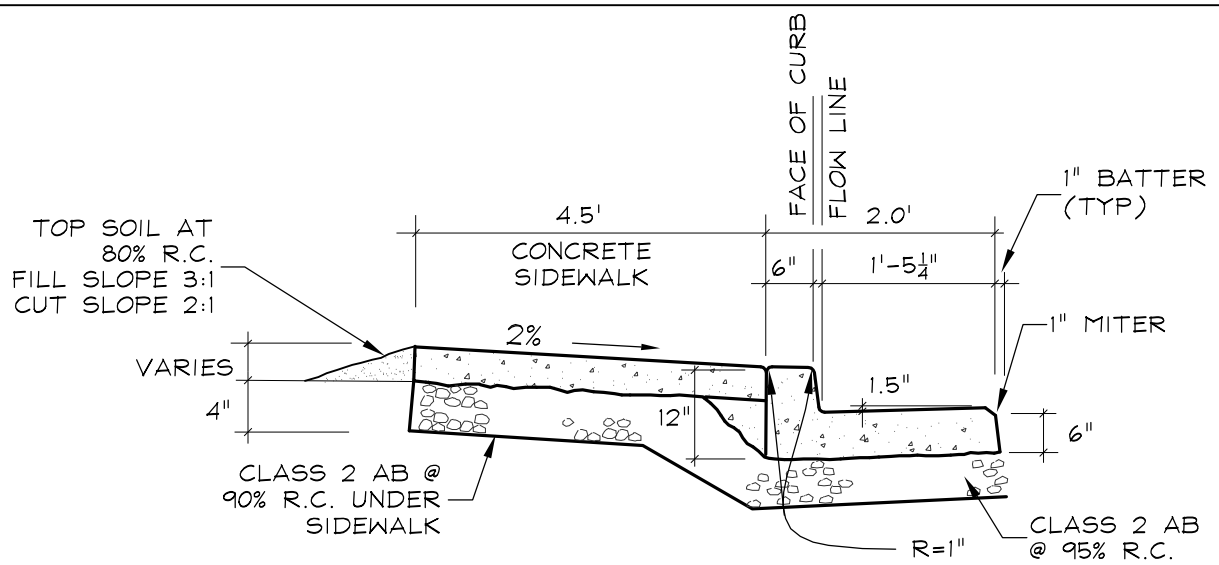

NOTES:

1. CURB REQUIRED UNLESS OTHERWISE SPECIFIED.
2. LOCATE ½" TRANSVERSE EXPANSION JOINTS OF ASPHALT IMPREGNATED CELOTEX IN SIDEWALK, CURB AND GUTTER AT 20' INTERVALS
3. ALL CONCRETE TO BE CLASS "B" OR BETTER.
4. FORMS SHALL BE APPROVED BY PUBLIC WORKS DIRECTOR PRIOR TO PLACEMENT OF CURB & GUTTER.

VERTICAL CURB, GUTTER, & SIDEWALK DETAIL
NTS

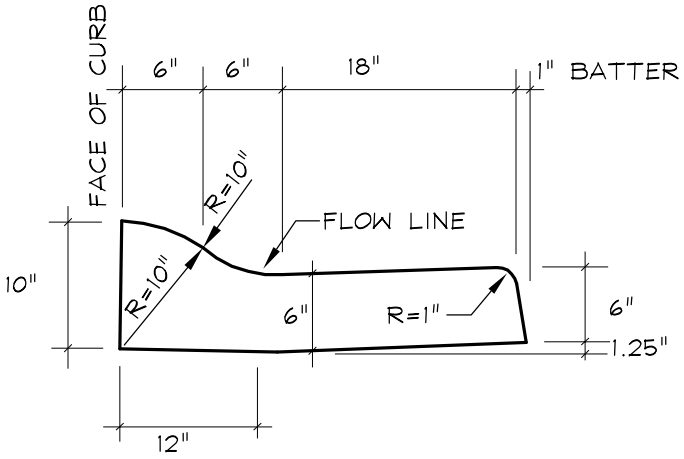

ROLL CURB & GUTTER
NTS

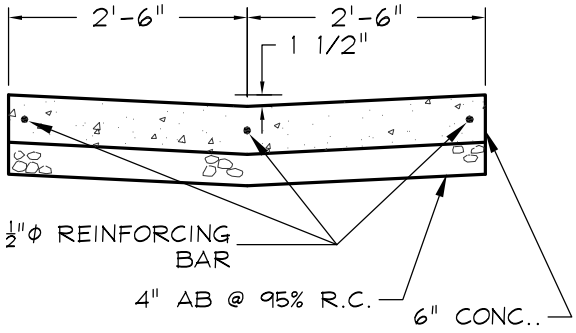

V-GUTTER
NTS

NOTES

1. VERTICAL CURB & GUTTER TO BE USED AT ALL CURB RETURNS.
2. ¼" EXPANSION JOINT AT BOTH ENDS & MIDPOINT OF CURB RETURN.
3. ¼" WIDE EXPANSION JOINTS MAX.INTERVAL 20'.
4. ⅛" SCORED CONTROL JOINTS MAXIMUM INTERVAL 10'.
5. GUTTER PAN WIDTH MAY BE REDUCED WITH APPROVAL OF CITY ENGINEER.

CURB, GUTTER & SIDEWALK			
DRAWN BY: VA	SCALE: N.T.S.	DRAWING NO.: ST-4	REV.:
APPROVED: RTW	DATE: JUNE 09		
CITY OF JACKSON			

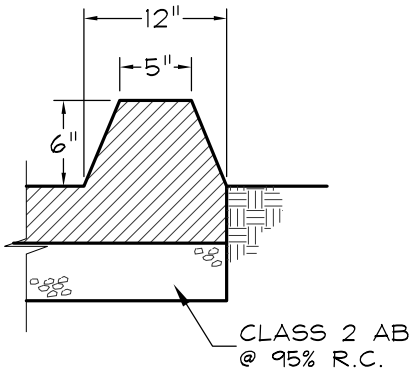

6" A.C. DIKE
NTS

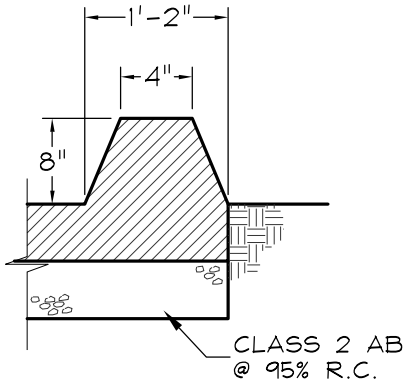

8" A.C. DIKE*
NTS

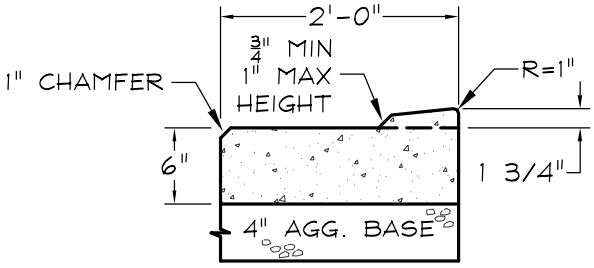

DEPRESSED CURB & GUTTER
NTS

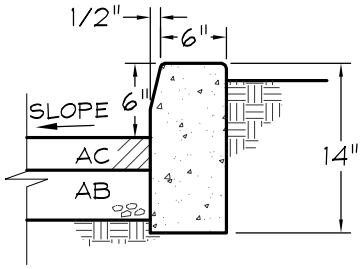

TYPE "B" CURB
NTS

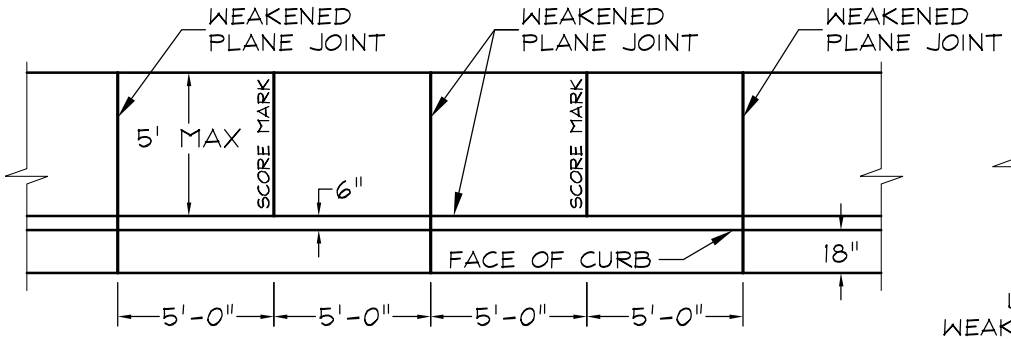

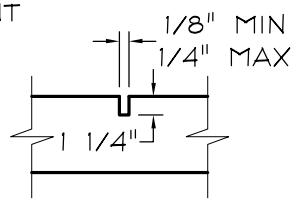

SECTION
U.O.N. TYPICAL
WEAKENED PLANE JOINT

WEAKENED PLANE JOINTS FOR CURB, GUTTER, & S.W.
NTS

NOTES

1. CONSTRUCT WEAKENED PLANE JOINTS AT 10' O/C MAX. AT RETURNS, LIGHT POLES, HYDRANTS, BOTH SIDES OF ANY DRIVEWAY, AND OTHER FIXED OBJECTS.

2. CONSTRUCTION SHALL BE IN ACCORDANCE WITH CITY STANDARDS.

* USE ONLY WHEN SPECIFIED

A.C. DIKES & CURB & GUTTER			
DRAWN BY: VA	SCALE: N.T.S.	DRAWING NO.: ST-5	REV.:
APPROVED: RTW	DATE: JUNE 09		
CITY OF JACKSON			

SLOPE - RAMP WIDTH SHALL NOT EXCEED 1" RISE IN 12" OF RUN, OR 8.33% MAX. SLOPE.

FINISH - CENTER RAMP SHALL HAVE HERRINGBONE GROOVES IN ACCORDANCE W/CALTRANS CURRENT STD. DETAILS. REMAINING RAMP SHALL BE NON-SLIP HEAVY BROOM FINISH OR EQUAL TO PROVIDE CONTRASTING FINISH WITH ADJACENT SIDEWALK.

CONCRETE - SHALL CONFORM TO SECT. 73 OF CALTRANS STD. SPECIFICATIONS.

MARKINGS - SEE CURRENT CALTRANS STD. DETAILS. MARKINGS SHALL BE APPROVED BY BUILDING OFFICIAL PRIOR TO PLACEMENT OF CONCRETE.

DETECTABLE WARNINGS - SHALL CONTRAST VISUALLY WITH ADJOINING SURFACES, EITHER LIGHT ON DARK OR DARK ON LIGHT AS APPROVED BY BUILDING OFFICIAL. NO YELLOW DETECTABLE WARNINGS ALLOWED.

*MAYBE REDUCED BY BUILDING OFFICIAL WHEN CIRCUMSTANCE WARRANT VARIANCE.

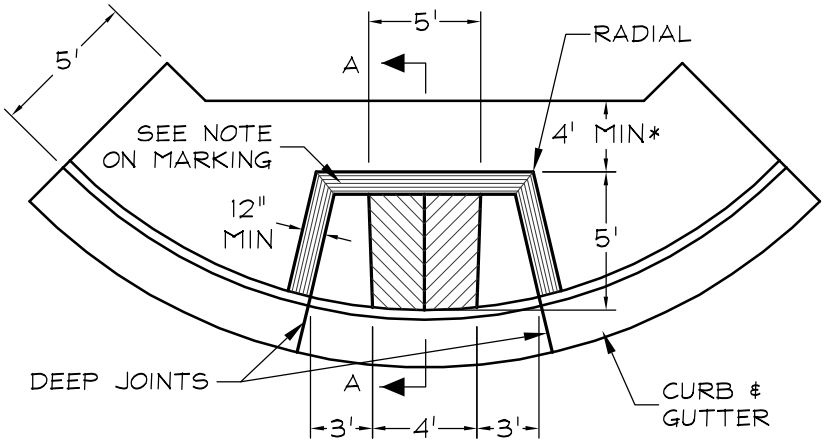

CURB RETURN RAMP
NTS

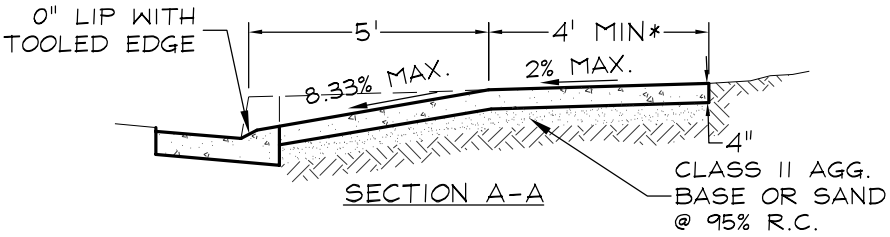

SECTION A-A

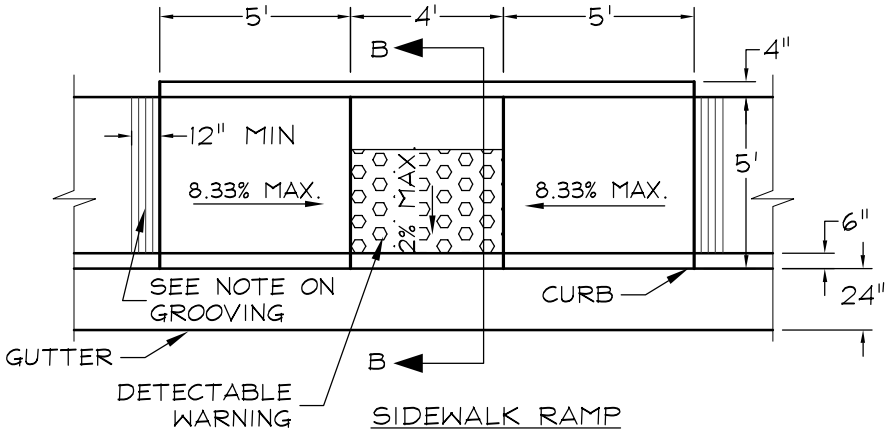

SIDEWALK RAMP
NTS

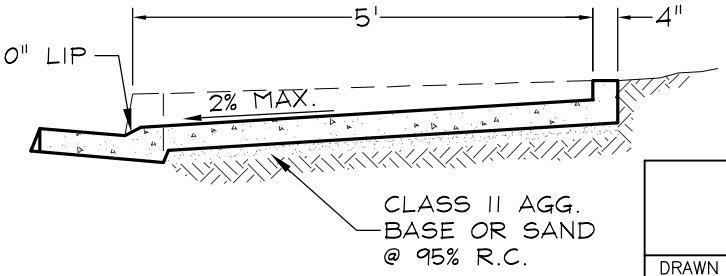

SECTION B-B

A.D.A. RAMP			
DRAWN BY: VA	SCALE: N.T.S.	DRAWING NO.: ST-6	REV.:
APPROVED: RTW	DATE: JUNE 09		
CITY OF JACKSON			

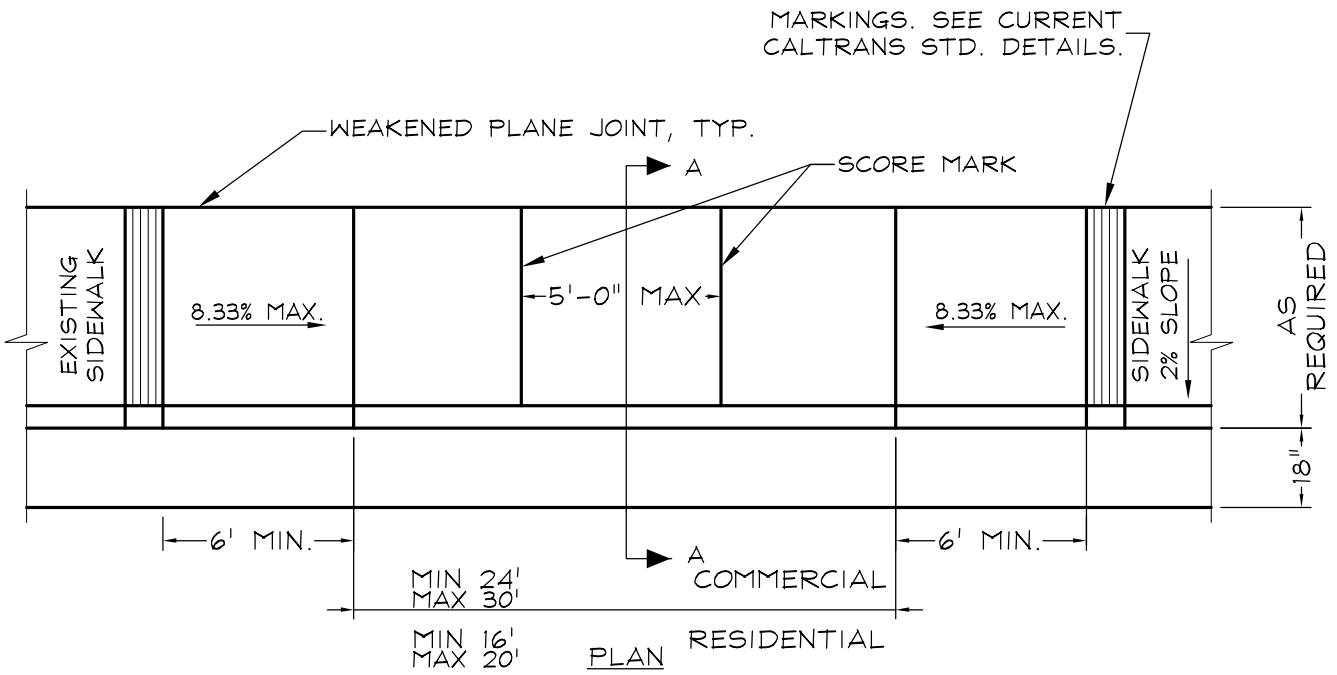

PLAN

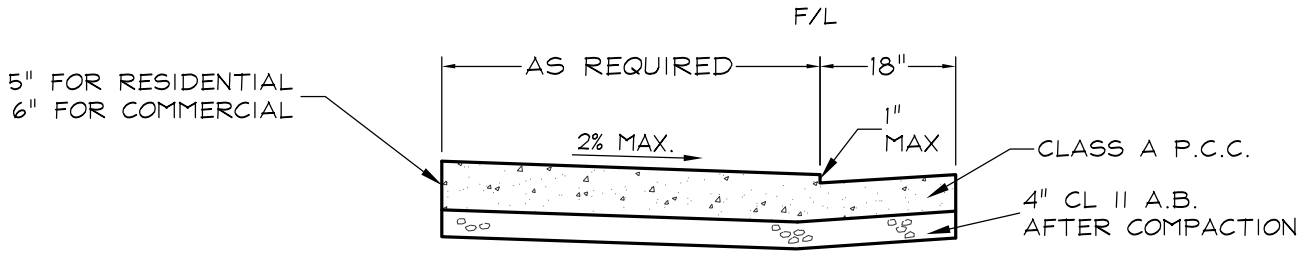

SECTION A-A

NOTES

DRIVEWAYS TO CONFORM WITH EXISTING SIDEWALK, UNLESS OTHERWISE DIRECTED BY CITY ENGINEER.

TYPICAL DRIVEWAYS			
DRAWN BY: VA	SCALE: N.T.S.	DRAWING NO.: ST-7	REV.:
APPROVED: RTW	DATE: JUNE 09		
CITY OF JACKSON			

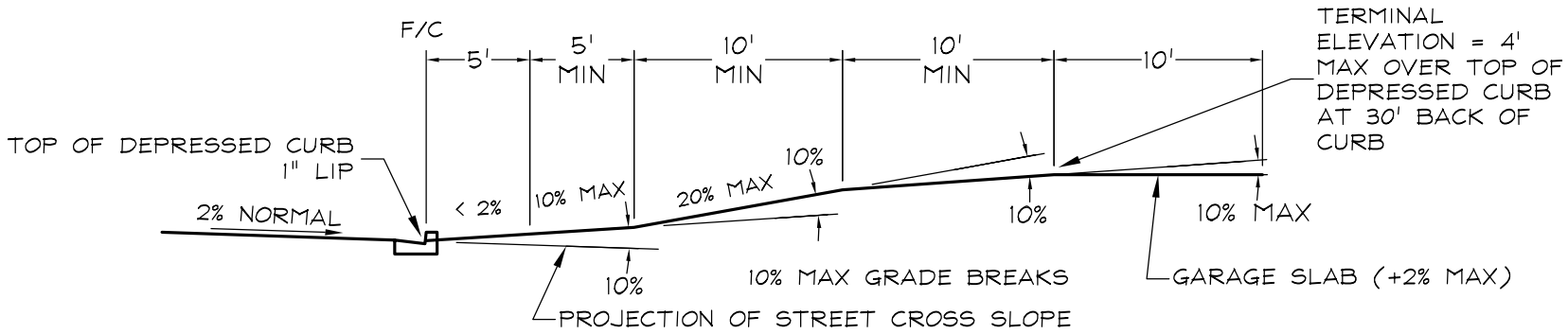

ASCENDING DRIVEWAY
PROFILE AT DOWNHILL SIDE OF DRIVEWAY

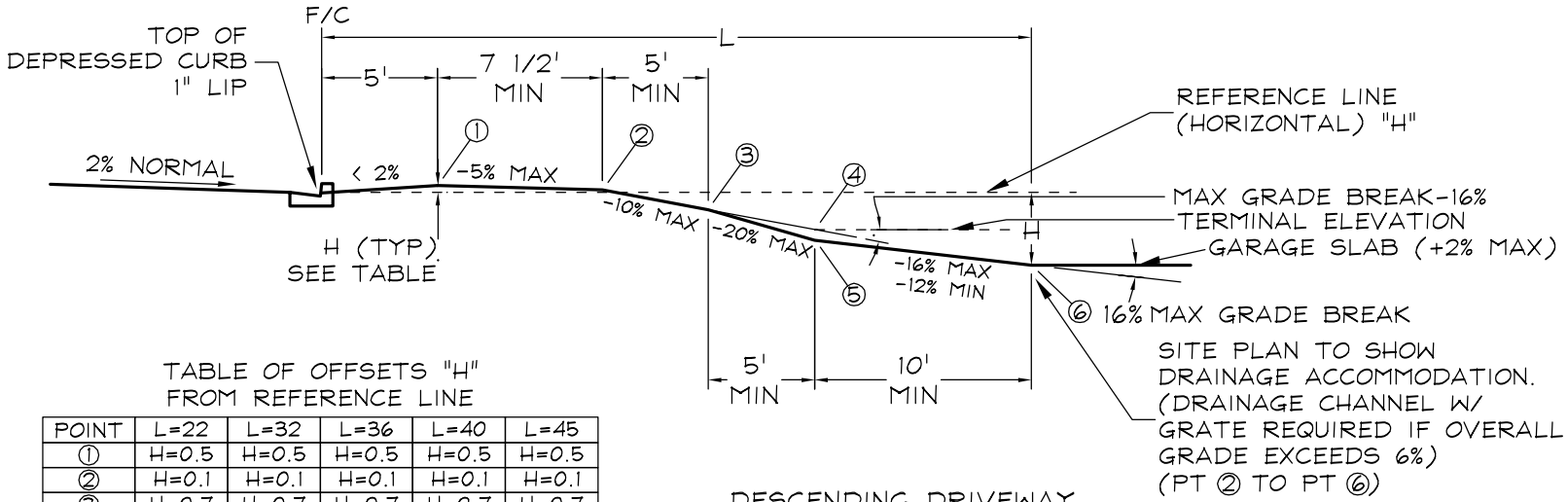

TABLE OF OFFSETS "H"
FROM REFERENCE LINE

POINT	L=22	L=32	L=36	L=40	L=45
①	H=0.5	H=0.5	H=0.5	H=0.5	H=0.5
②	H=0.1	H=0.1	H=0.1	H=0.1	H=0.1
③	H=0.7	H=0.7	H=0.7	H=0.7	H=0.7
④	H=1.6				
⑤		H=2.0	H=2.7	H=4.0	H=5.2
⑥		H=3.2	H=3.9	H=5.2	H=6.4

DESCENDING DRIVEWAY
PROFILE AT UPHILL SIDE OF DRIVEWAY

RESIDENTIAL DRIVEWAY
VERTICAL ALIGNMENT

DRAWN BY: VA
APPROVED: RTW
SCALE: N.T.S.
DATE: JUNE 09
DRAWING NO.: ST-7A
REV.:

CITY OF JACKSON

NOTES

1. STOP SIGN SHALL BE 30" FOR ARTERIALS, AND FOR ALL OTHER STREET TYPES SHALL BE 24".
2. "HIGH INTENSITY" REFLECTIVE SHEETING SHALL BE USED WITH GAUGE=0.080
3. STREET NAME SIGNS TO BE ORDERED THROUGH CITY.
4. USE STANDARD 2" I.D. GALVANIZED IRON PIPE.
5. STOP BAR & "STOP" PER CALTRANS STANDARD DETAIL A24D & A24E.

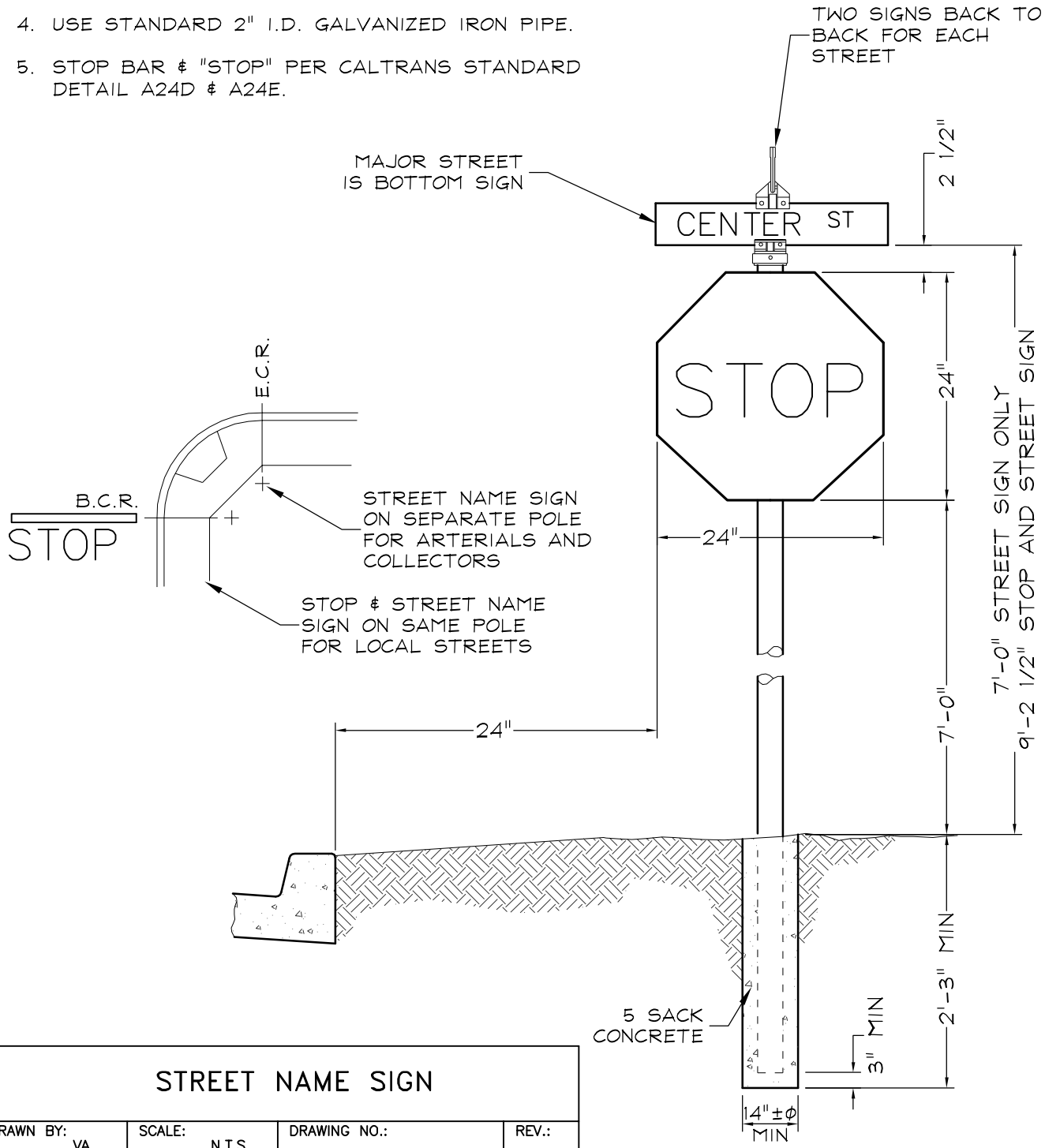

STREET NAME SIGN			
DRAWN BY: VA	SCALE: N.T.S.	DRAWING NO.: ST-8	REV.:
APPROVED: RTW	DATE: JUNE 09		
CITY OF JACKSON			

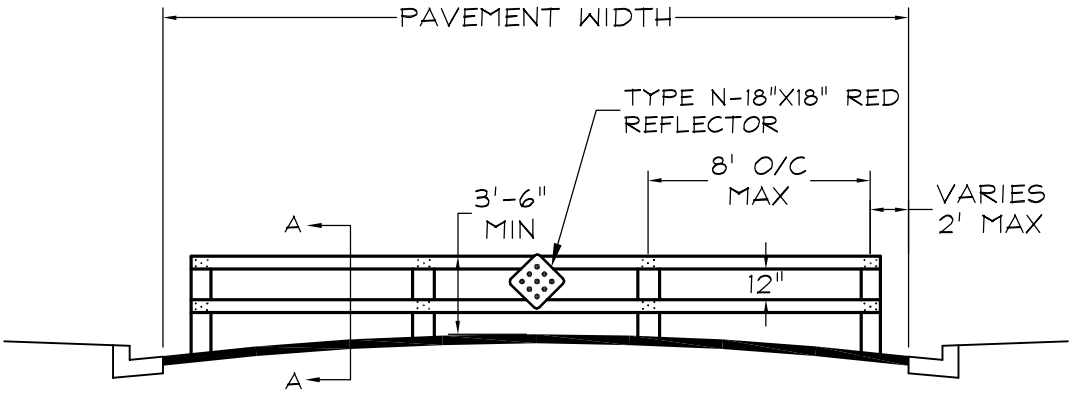

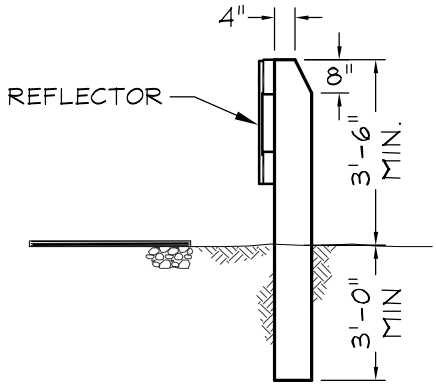

SECTION A-A

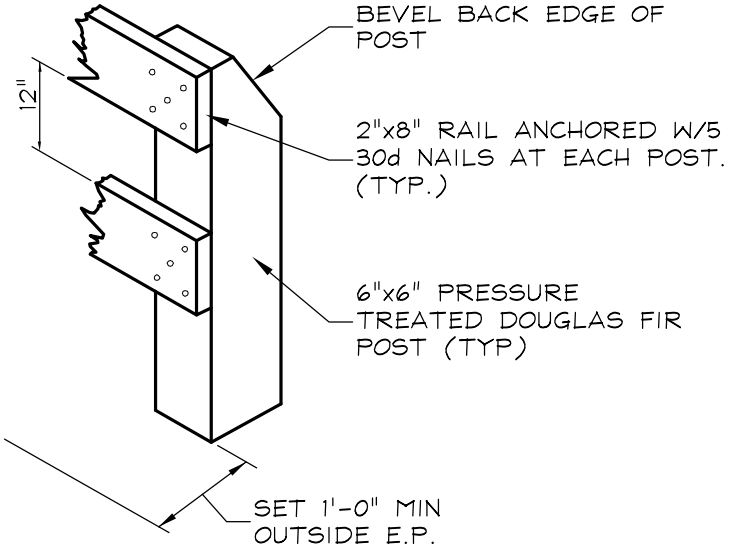

NOTES

1. RAILS TO BE 2" x 8" CLEAR DOUGLAS FIR S4S AND POSTS TO BE 6"x 6" P.T. DOUGLAS FIR.
2. BUTT ALL RAIL JOINTS ON CENTER OF POST.
3. ALL EXPOSED WOOD SHALL BE PAINTED YELLOW, 2 COATS OF EXTERIOR ALKYD RESIN HI-GLOSS ENAMEL OR APPROVED EQUAL.
4. STANDARD TYPE-N, 18"x18" REFLECTOR TO BE CENTERED ON BARRICADE AND PLACED AT 12'± O/C.

STANDARD BARRICADE			
DRAWN BY: VA	SCALE: N.T.S.	DRAWING NO.: ST-9	REV.:
APPROVED: RTW	DATE: JUNE 09		
CITY OF JACKSON			

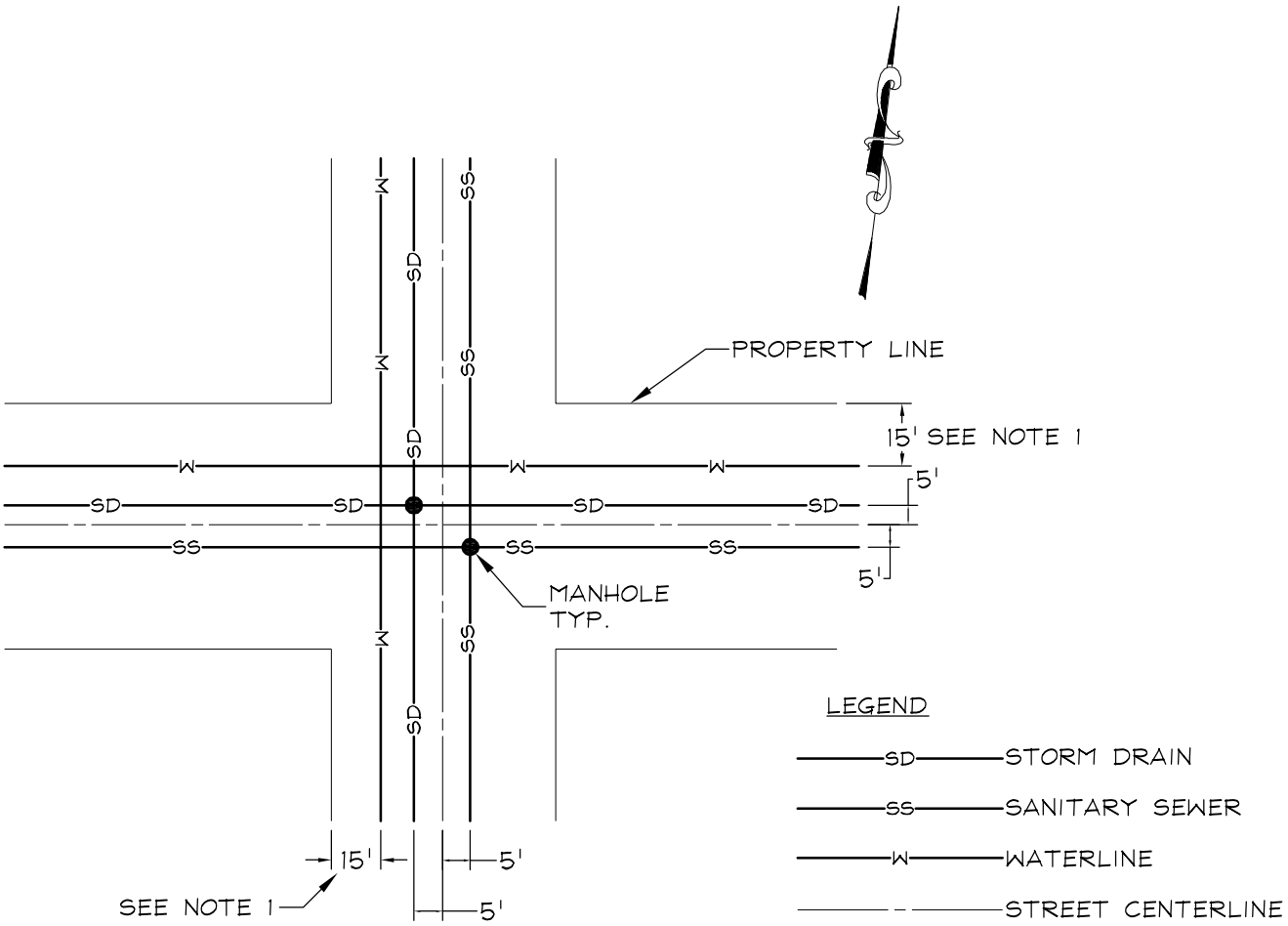

NOTES

1. ON 50' STREET RIGHT OF WAY, THE WATERLINE SHALL BE PLACED 12' FROM PROPERTY LINE.
2. DEVIATIONS FROM THE STANDARD LOCATION SHOWN MAY BE APPROVED BY THE DIRECTOR OF PUBLIC WORKS.

TYPICAL LOCATION OF UNDERGROUND UTILITIES			
DRAWN BY: VA	SCALE: N.T.S.	DRAWING NO.: ST-10	REV.:
APPROVED: RTW	DATE: JUNE 09		
CITY OF JACKSON			

NOTES:

1. REFER TO CITY STANDARD DETAILS 12 & 13 FOR STREET LIGHT DETAILS.
2. STREET LIGHT BASE PLATE CAN BE CHANGED TO SLIP BASE AT THE DISCRETION OF THE CITY ENGINEER. SLIP BASE PLATE SHALL BE IN ACCORDANCE WITH THE STATE STANDARD PLANS AND SPECIFICATIONS.
3. LUMINAIRE ARM LENGTH SHALL BE 6'-0" UNLESS OTHERWISE NOTED ON THE PLANS.
4. LUMINAIRE ARMS SHALL BE ROUND, TAPERED STEEL TUBES, TAPER OF 0.1375" TO 0.1400 INCH PER FOOT WITH AN END SECTION 2⅜" OD FOR MOUNTING HARDWARE. EXTENSIONS OF 2 NPS STANDARD PIPE AND 7" LONG MAY BE USED AT THE OPTION OF THE MANUFACTURER.
5. ASTM A307 ANCHOR BOLTS ARE REQUIRED FOR EACH POLE. PROVIDE A HEX NUT, LEVELING NUT AND 2 WASHERS FOR EACH BOLT.
6. HANDHOLE REINFORCEMENT RING SHALL BE ¼"x2".
7. HANDHOLES SHALL BE ORIENTATED ON THE POLE SO THAT A TECHNICIAN FACING THE THE HAND HOLE IS ALSO FACING ONCOMING TRAFFIC.
8. DETAIL D, (ON CITY STANDARD DETAIL 13) FATIGUE RESISTANT WELD, IS REQUIRED AT POLE BASE PLATE.
9. CAP SCREWS SHALL BE TIGHTENED BY THE TURN-OF-NUT METHOD ⅓ TURN TO FORM A SNUG TIGHT CONDITION. NO WASHER WILL BE REQUIRED.
10. DURING POLE ERECTION, THE POST SHALL BE RAKED AS NECESSARY WITH THE USE OF LEVELING NUTS TO PROVIDE A PLUMB POLE AXIS.
11. ELECTROLIER IDENTIFICATION DECALS TO BE ASSIGNED BY PG&E.
12. OUTSIDE DIAMETER, WALL THICKNESS, AND CORRESPONDING SECTION PROPERTIES AS SHOWN IN THE CITY STANDARDS ARE MINIMUMS. UNLESS OTHERWISE SPECIFIED, ALTERNATIVE SECTIONS REQUIRE APPROVAL BY THE CITY ENGINEER.
13. OPTIC SHALL BE AEL ROADWAY SERIES 315 CUTOFF STYLE FLAT OR SAG GLASS, OR APPROVED EQUAL.

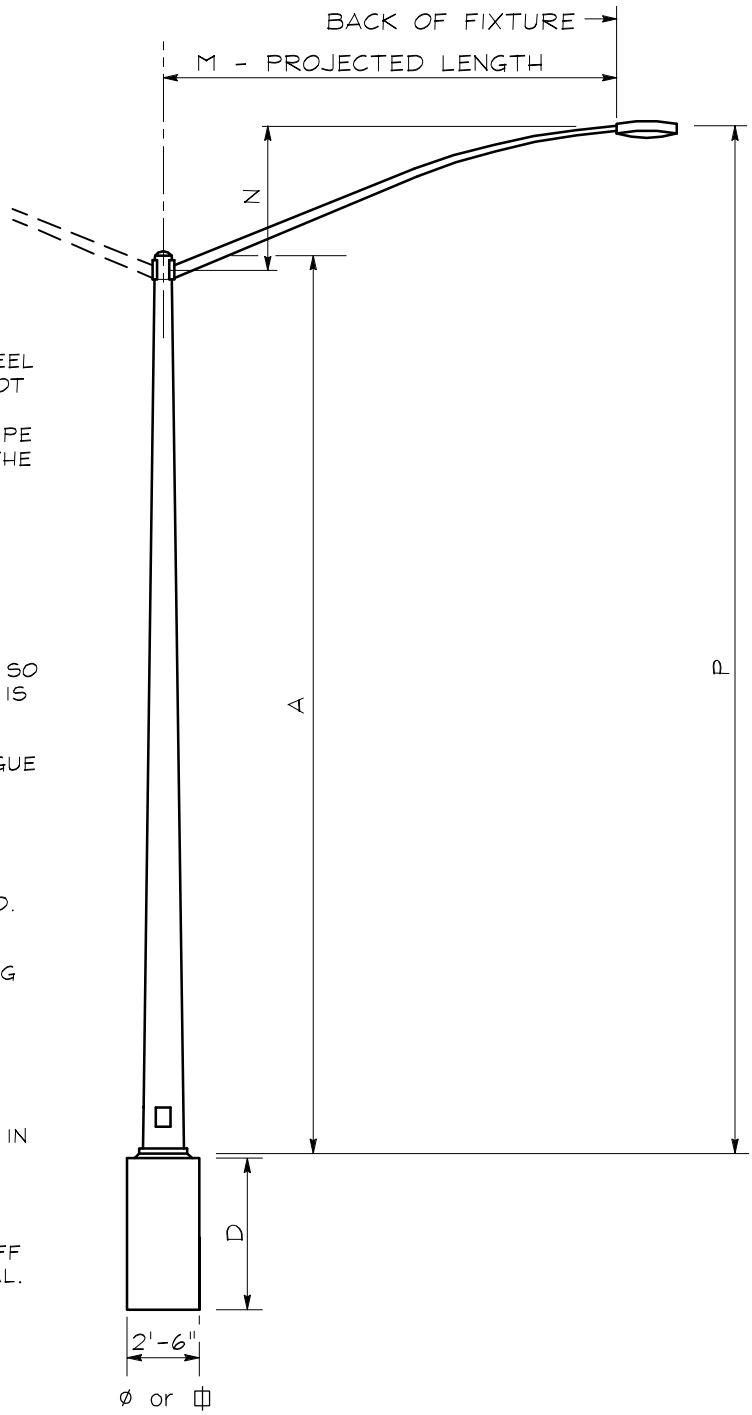

POLE TYPE	POLE DATA				BASE PLATE DATA				FOUNDATION DEPTH (D)
	(A) HEIGHT	MIN OD		WALL THICKNESS	(C)	D1 BOLT CIRCLE	THICK-NESS	ANCHOR BOLTS SIZE	
		BASE	TOP						
SINGLE ARM	30'	8"	3⅞"	0.1196"	1'-0"	1'-0"	1"	1"ø x 3'-0" x 4"	5'-0"
DOUBLE ARM	30'	8"	3⅞"	0.1793"	1'-0"	1'-0"	1"	1¼"ø x 42" x 6"	7"-2"

LUMINAIRE ARM DATA				
(M) PROJECTED LENGTH	(N) RISE	MIN OD AT POLE	NOMINAL THICKNESS	(P) TOTAL HEIGHT
6'-0"	2'-0"±	3¼"	0.1196"	31'-6"±
8'-0"	2'-6"±	3½"	0.1196"	32'-0"±

STREET LIGHT

DRAWN BY: FWW	SCALE: N.T.S.	DRAWING NO.: ST-11	REV.:
APPROVED: RTW	DATE: JUNE 2010		

CITY OF JACKSON

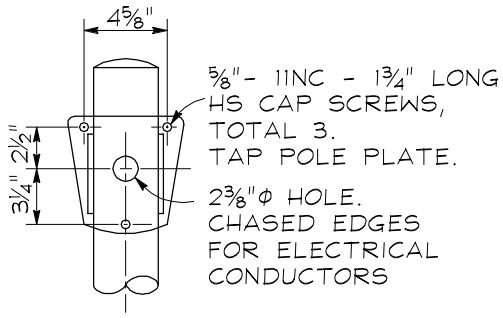

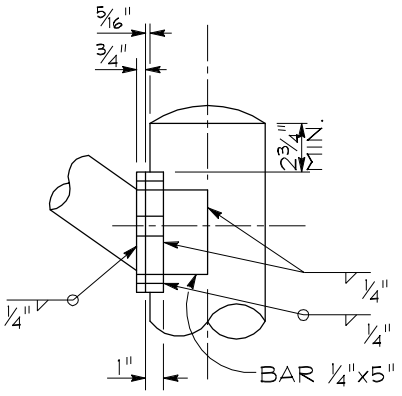

SINGLE ARM CONNECTION

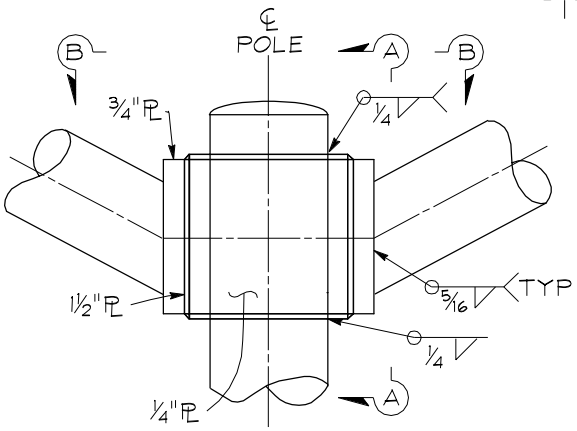

DOUBLE ARM CONNECTION

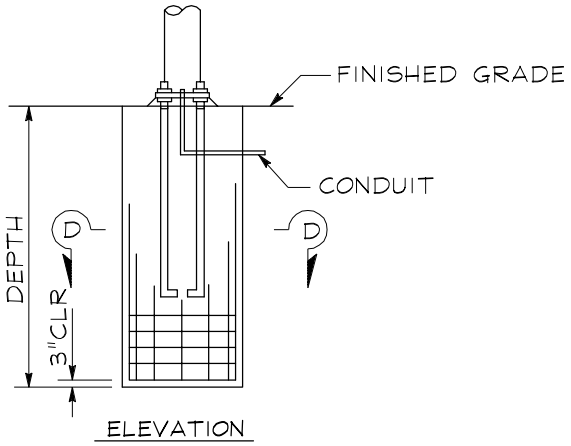

ELEVATION

CAST-IN-DRILLED HOLE
PILE FOUNDATION

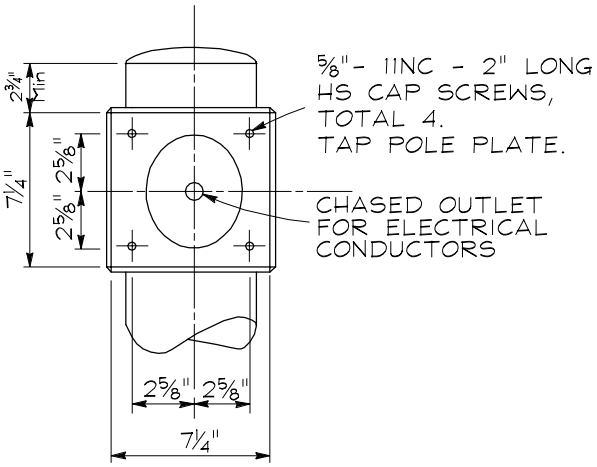

SECTION A-A

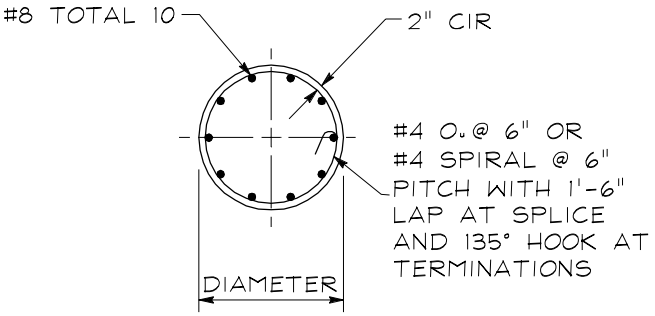

SECTION D-D

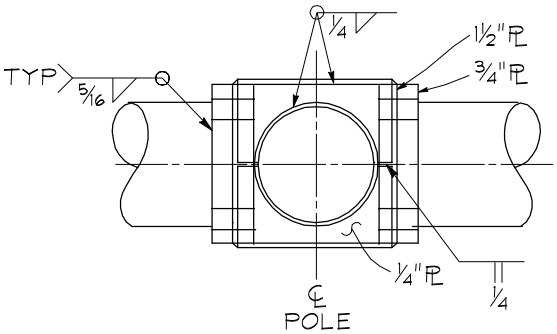

SECTION B-B

STREET LIGHT – DETAILS			
DRAWN BY: FWW	SCALE: N.T.S.	DRAWING NO.: ST-12	REV.:
APPROVED: RTW	DATE: AUGUST 09		
CITY OF JACKSON			

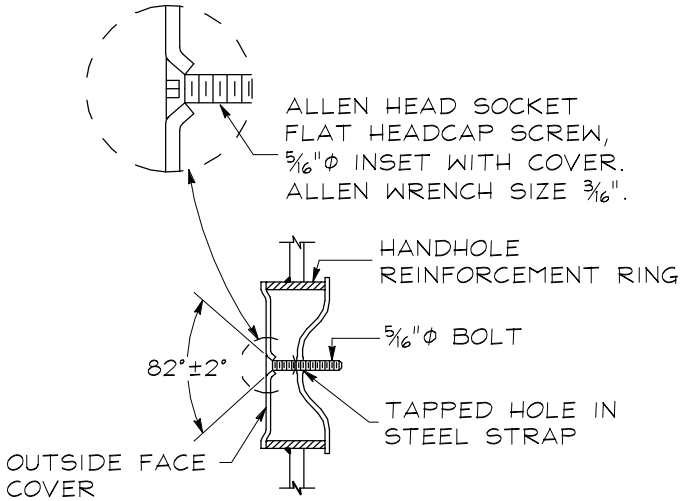

TAMPER RESISTANT HANDHOLE COVER

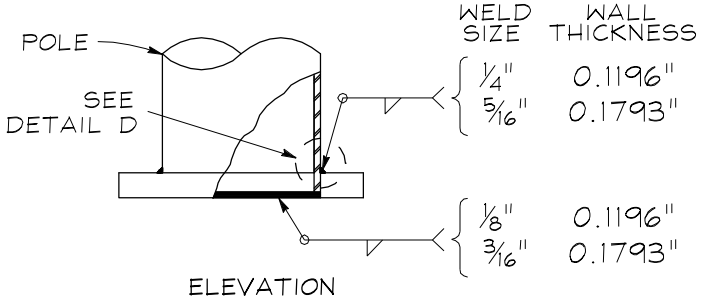

ELEVATION

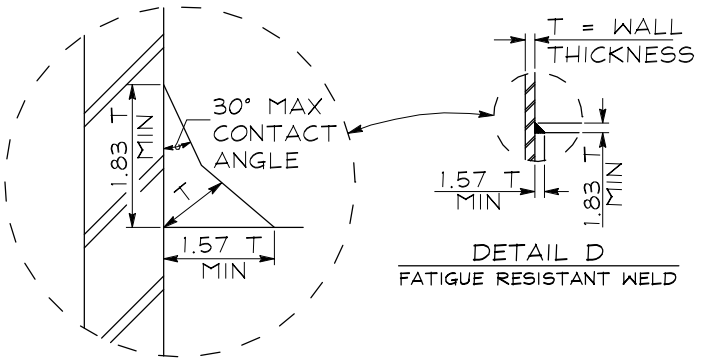

DETAIL D
FATIGUE RESISTANT WELD

NOTE: FOR WELD SIZE CALCULATIONS T MUST BE 3/16" OR MORE

POLE BASE WELD DETAIL

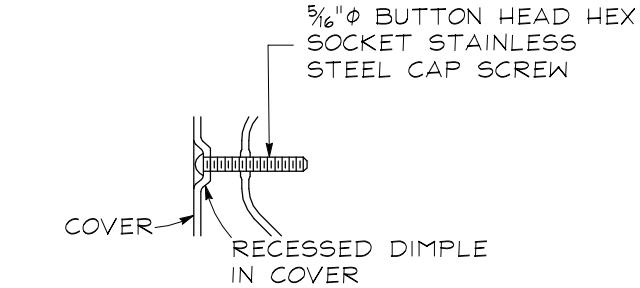

ALTERNATIVE TAMPER RESISTANT HANDHOLE COVER

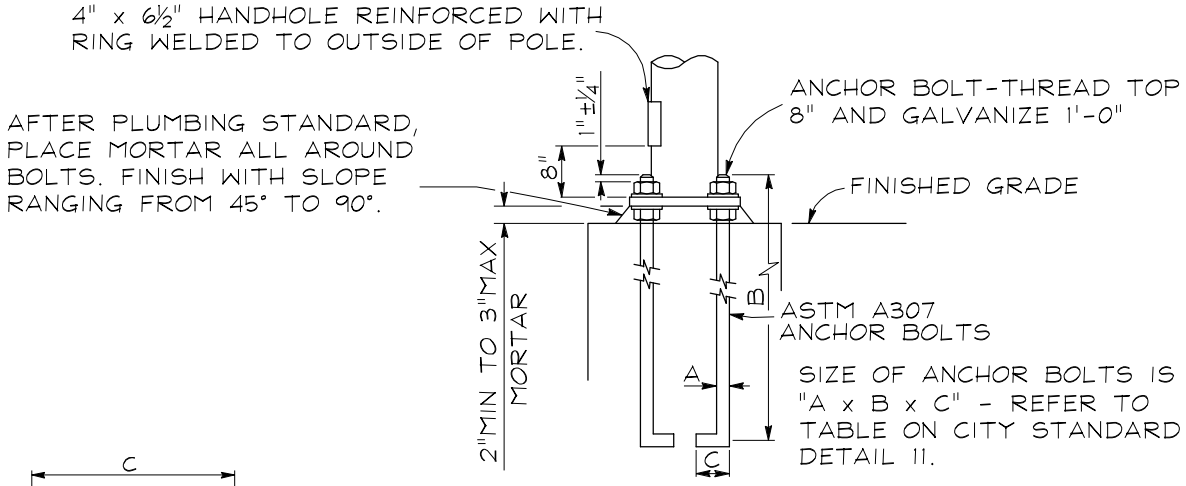

HANDHOLE AND ANCHORAGE DETAILS

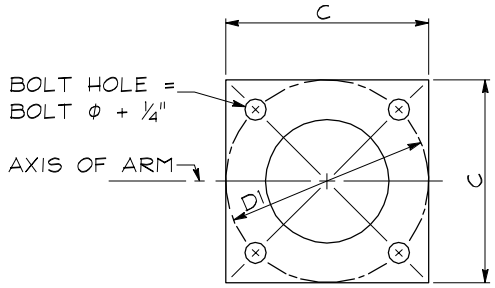

BASE PLATE

STREET LIGHT – DETAILS			
DRAWN BY: FWW	SCALE: N.T.S.	DRAWING NO.: ST–13	REV.:
APPROVED: RTW	DATE: AUGUST 09		
CITY OF JACKSON			

17.00 GENERAL CONDITIONS, PIPELINE EXTENSION AGREEMENTS: WATER

17.01 Release for Construction

Before release for construction of any work to be done under a Mainline Extension Agreement ("MLX"), the plans shall be approved and signed by the City Engineer; the MLX shall be signed by the MLX Applicant and the City; all necessary deposits and fees shall be paid; approved insurance shall be received; all required easements and permits shall be submitted and accepted by the City; and a faithful performance guarantee for facilities to be constructed within the public right of way shall be given to the City.

Any work done prior to release for construction may be rejected by the City.

17.02 Standards

All water facilities to be accepted for ownership and maintenance by THE CITY OF JACKSON, including but not limited to water and service lines, service boxes, valves and all miscellaneous appurtenances, shall conform to the latest revision of these Specifications. The MLX Applicant, and the MLX Applicant's Developer, Engineer, Contractor and/or Architects shall be responsible for obtaining all necessary information, requirements, bid and complete the work as shown on the approved plans.

17.03 Insurance

The MLX Applicant or the MLX Applicant's Contractor shall carry insurance as outlined in the MLX. The insurance shall specifically name the City, its directors, officers, and employees as additional insureds.

Before work is commenced, the Applicant or its Contractor shall furnish the City with certificates of insurance as satisfactory proof that he carries worker's compensation insurance as required by law and liability insurance in compliance with the MLX Agreement requirements.

17.04 Notification

The MLX Applicant shall establish one single point of contact for the duration of design and another for the duration of construction and shall provide the necessary contact information.

The MLX Applicant and/or the MLX Applicant's Contractor shall contact the City Inspector at (209)223-1646, 48 hours prior to beginning water line installation, or any excavation within twenty feet (20') of any existing City facilities. This information shall include the type of work planned. The Contractor shall contact the City Inspector 24 hours prior to each and every day that work shall be performed on or near City facilities. The Contractor shall notify all other public agencies affected by the proposed construction and shall obtain and pay all costs for any and all required permits.

17.05 Inspection

One or more inspectors may be assigned by the City Engineer to observe any and/or all of the work. The inspector(s) may inspect any part of the work and/or materials and shall have full

authority to accept or reject said work and/or Contractor of the obligation to conduct comprehensive inspections or the work, to furnish acceptable materials, perform acceptable work and to provide adequate safety precautions.

The MLX Applicant shall be billed and shall pay all City costs of, but not limited to, inspection, mapping, clerical and administrative support, testing and engineering review.

A pre-construction meeting shall be conducted prior to starting construction.

17.06 Existing Utility Location

For location of existing water lines, appurtenances and other utilities, the Developer and/or the Contractor or any subcontractor on a project shall notify U.S.A. (Underground Service Alert) at (800) 227-2600 and WUUA (Western Underground Utilities Alert) at (800) 424-3447, forty-eight (48) hours before performing any excavation. Not all existing utility owners participate in U.S.A. or WUUA and proper procedures for location vary. Proper location is the Developer's and/or the Contractor's responsibility.

17.07 Staking

The MLX Applicant or the Applicant's Contractor shall provide stakes for line and grade for the water installation.

17.08 Soils Compaction Testing

The City may require soils compaction testing, and the MLX Applicant shall pay the City's costs associated with such testing.

Density of soil will be determined in place by the sand cone method, ASTM D 1556 or by nuclear methods, ASTM D 2922 and D 3017. Compaction tests will be performed as directed by the City Engineer or Inspector. At a minimum, one test shall be performed per lift, per 200 linear feet of pipe. Laboratory moisture-density relations of soils will be determined per ASTM D 1557. Relative density of cohesionless soils will be determined per ASTM D 4253 and D 4254. Backfill materials will be sampled per ASTM D 75. Compaction shall be deemed to comply with the specifications when no more than one test of any three consecutive tests falls below the specified relative compaction. The one test shall be no more than three percentage points below the specified compaction. The Contractor shall pay the costs of any retesting of work not conforming to the specifications.

17.09 Hydrostatic Testing, Chlorination & Flushing

The Contractor shall provide all labor and materials required for hydrostatic and bacteriological testing, chlorination, and flushing. All testing and flushing shall be done under the direct supervision of the City. City personnel shall collect all test samples.

17.10 Submittals

The Contractor shall furnish four (2) copies of submittals for approval by the City Engineer for all pumping, pressure reducing or electrical facilities, for any materials and/or installations not

covered and/or specified in the Technical Provisions or detailed on the Plans and as required by the City Engineer.

17.11 Construction Water

Any and all water to be used shall be arranged through the City's Customer Service Department (209) 223-1646. All construction water charges shall be paid prior to acceptance of the job.

17.12 As Built Drawings

The Contractor shall maintain and make available to the Inspector on the jobsite one complete plan set. After each portion of the work is installed, the Contractor shall record all deviations from the original design shown in the drawings either by additional sketches or red ink thereon. Upon completion of the job, the MLX Applicant or Contractor shall deliver this record set and a digital set to the City of Jackson Engineering Department.

17.13 Acceptance

City assumes no obligation for maintenance of the facilities included in a MLX Agreement until such time as they are formally accepted in writing by the City Council. Any costs incurred by the City due to emergency or other repairs prior to final acceptance by the City shall be billed to, and paid by, the MLX Applicant.

The system shall not be accepted and water service shall not be initiated until all conditions contained within the MLX Agreement are satisfied, As-Built Record Drawings have been received and THE CITY OF JACKSON has provided a Certificate of Acceptance.

18.00 PLAN REQUIREMENTS: WATER

18.01 Water Line Layout Sheet

The treated and raw water system shall be shown on an overall plan layout with a scale of one inch equals one hundred feet (1" = 100'). This layout shall show pipe size, valving, hydrants, existing valving to be used for tie-ins, boundary lines, property lines, lot numbers, street names, section lines and corners and public easements. This layout must be incorporated into the improvement plans and may be shown on the title sheet if desired. Care must be taken to make sure the scale and orientation are correct since the layout sheets are used to generate City master water system maps.

18.02 Easements

The MLX Application shall provide a minimum twenty feet (20') non-exclusive recordable easement, ten feet (10') on either side of all water lines, to the City for all water lines installed outside a public right of way. The location of the easement and easement language shall be approved by the City. The project will not be accepted, nor service provided until the City receives the easements and they are recorded.

19.00 DESIGN STANDARDS: WATER

19.01 Introduction

These design criteria shall govern the engineering design of all City water facilities.

19.02 Intent of Criteria

The intent of these criteria is to ensure that the water system constructed that will dependably and safely convey the required amount of high-quality water throughout the distribution system at the least overall cost. In establishing the required amount of water, periods of peak day demand occurring in conjunction with an emergency fire flow demand, and peak hour demands, shall be considered.

19.03 Current Standards

Pertinent and current requirements of the following agencies or standards shall be complied with:

1. Laws and Standards of the State of California, Department of Public Health, relating to Domestic Water Supply, and particularly therein the Standards of Minimum Requirements for Safe Practice in the Production and Delivery of Water for Domestic Use.

2. Title 17, Chapter V, Sections 7583-7622, California Administrative Code, regarding cross connections.

3. Applicable ordinances, rules and regulations of all local agencies, such as AWA, Amador County, cities, fire districts, etc.

19.04 Water Supply Pressure

Typical normal operating pressures shall be not less than forty (40) PSI no more than one hundred (100) PSI at the service connection. The minimum peak hour (200% peak day flow) pressure in the system shall be thirty (30) PSI. The minimum pressure at any point in the system during periods of coincident peak day and fire flow shall not be less than twenty (20) PSI. Normal operating pressures greater than one hundred (100) PSI will require special design criteria, contact the City Engineering Department.

Services with more that eighty (80) PSI static pressure shall be equipped with a pressure regulator set to sixty (60) PSI maximum. The regulator shall be owned and maintained by the property owner. Pressure regulator shall be installed at the time of service line construction.

Services on which the peak day pressure at the point of use is less then twenty-five (25) PSI should be equipped with an individual backflow prevention device and hydropneumatic system, which shall be owned and maintained by the property owner.

19.05 Peak Day Flow

Use one (1) GPM per connection as the peak day flow rate for new medium to high density land use with five-eighths inch by three-fourths inch (5/8”) x (¾”) meters. For large lot projects of

one (1) acre or more per lot, use three (3) GPM per connection for the peak day flow rate. For projects with larger meters and/or commercial or industrial uses, contact the Engineering Department regarding peak day flows.

19.06 Fire Flow

The local fire protection authority shall determine the fire flow requirements. The maximum allowable velocity anywhere in the system at the required peak day or peak hour shall be seven feet (7') per second. The maximum at the required peak day plus fire flow rate shall be eleven feet (11') per second. The minimum system-wide residual pressure during peak day demand conditions, plus fire flow, shall be twenty (20) PSI.

19.07 Distribution System Design

19.07.1 Hydraulic Analysis

A hydraulic analysis of any proposed distribution system and associated necessary improvements to the existing system shall be supplied to the City upon request.

19.07.2 Sizing

The minimum offsite transmission pipe size shall be eight inches (8"). The minimum distribution pipe size shall be eight inches (8"). The minimum pipe size to serve a single fire hydrant shall be a looped (two-way feed) eight inch (8") or a single feed eight inch (8").

19.07.3 Material

Allowable waterline pipe materials shall be Ductile Iron Pipe, Polyvinyl Chloride (PVC) Pressure Pipe with minimum pressure rating of one hundred fifty (150) PSI.

19.07.4 Water Service Piping

Meters shall be five-eighths inch (5/8"), three-fourths inch (¾") and one inch (1") served with one inch (1") service piping. One inch (1") service piping shall be polyethylene CTS.

One and one-half inch (1½") and two inch (2") meters shall be served with two inch (2") service piping. Two inch (2") service piping shall be polyethylene CTS.

Three inch (3") and larger meters shall be served by four inch (4") diameter or larger size piping. Allowable service piping for 3" and larger meters shall be polyvinyl chloride, or ductile iron pipe. Service lines larger than two inches (2") shall have a buried service gate valve with two inch (2") operating nut at the main.

19.08 Distribution System Layout Requirements

19.08.1 Water Line Locations and Clearances

Water lines shall be placed in a public right of way unless the City deems the alignment impractical, in which case a twenty foot (20') easement is required. Water lines shall be placed six feet (6') off centerline on north and west alignments when in public street right of ways. Generally, no water line shall be installed without three feet (3') or more clearance from the lip of the gutter within public street right of ways.

All parallel dry utilities shall be installed with a minimum of twenty-four inches (24") horizontal separation from the water line. Storm sewer, raw water and gas lines shall maintain a minimum of four feet (4') horizontal separation and one foot (1') vertical clearance. Sewer lines, water treatment plant backwash lines and Title 22 "Recycled Water" lines shall maintain a minimum of ten feet (10') horizontal separation and one foot (1') vertical clearance. All crossing utilities shall be installed with a one foot (1') minimum vertical separation and sewer, backwash and recycled water lines shall cross under the water lines. All sewer/water crossings shall conform to California State Health Department regulations.

Water distribution lines shall be looped whenever possible and where required by the City Engineer.

19.08.2 Service Lines

Service lines from the water main to the property line or edge of easement shall normally be installed at the time the main is constructed. Service lines from mains installed in private roads shall extend 10 feet (10') beyond the edge of the pavement. Meters and boxes shall not be located in driveways.

Service lines shall be placed grouped at property lines and not placed on property lines having other utilities if possible.

Service lines shall have a maximum length of one hundred (100) LF from the water main to the meter.

Manifold services to more than one parcel shall not be permitted.

Commercial/Industrial customers shall have separate distribution line connections for domestic use and fire protection.

No service lines shall be permitted to tap into a fire hydrant lateral.

19.08.3 Line Valves

The distribution system shall be equipped with a sufficient number of line valves so that no single shut-down will result in shutting down a transmission main of more than one thousand feet (1000') or necessitate the removal from service of length of pipe greater than five hundred feet (500') in other areas. Preferably no more than two fire hydrants shall be removed from service.

Valves shall preferably be located at street intersections. If it is necessary to install valves between street intersections, they shall be located on property lines.

All valves shall be flanged or flange x M.J. Use three (3) valves on all branch tees and four (4) valves on all crosses. Exceptions shall be shown on the plans and approved by the City Engineer.

Valve size on domestic water shall conform to pipe size, unless clearly stated and approved otherwise on the plans. Ten inch (10”) and smaller valves shall be gate type. Twelve inch (12”) and larger valves shall be butterfly type.

Valve size on raw water shall conform to pipe size unless clearly stated on the plans. Valves shall be gate type. Valves sixteen inches (16”) and larger shall have a minimum two inch (2”) bypass valve.

19.08.4 Blow-Off Valve

Blow off valve assemblies shall only be permitted in temporary locations. All installations where a permanent blow-off is required shall be accomplished through the use of a standard fire hydrant.

A. A fire hydrant blow-off shall be installed at all major low points and at the ends of lines. Wherever possible, the fire hydrant blow-off shall be installed in the street right of way. In no case shall the location be such that there is a possibility of back-siphonage into the distribution system.

B. On stubs for future service extensions, a two inch (2”) end of line BOV shall be installed.

19.08.5 Combination Air-Vacuum Release Valve (CAVRV)

A combination air-vacuum release valve shall be installed at all high points, and between valved sections of pipe as determined by the City Engineer.

Provide one inch (1”) CAVRV on line sizes up to twelve inches (12”); two inches (2”) CAVRV on line sizes fourteen inches (14”) to eighteen inches (18”), the CAVRV size shall be approved by the City Engineer.

20.00 CROSS CONNECTION CONTROL: WATER

20.01 Purpose

The purpose of this program is:

1. To protect the public water supply against actual or potential contamination through cross connections by isolating sources of contamination that may occur within a water user's premises because of some undiscovered or unauthorized cross connection on the premises.

2. To eliminate existing connections between drinking water systems and other sources of water that are not approved as safe and potable for human consumption.

3. To eliminate cross connections between drinking water and sources of contamination.

4. To prevent the making of cross connections in the future.

These regulations are adopted pursuant to the State of California Administrative Code, Title 17 – Public health entitled "Regulations Relating to Cross Connections."

It is unlawful for any person, firm or corporation at any time to make or maintain or cause to be made or maintained, temporarily or permanently, for any period of time whatsoever, any cross connection between plumbing pipes or water fixtures being served with water by the City and any other source of water supply or to maintain any sanitary fixture or other appurtenances or fixtures which, by reason of their construction, may cause or allow backflow of water or other substances into the water supply system of the City and/or the service of water pipes or fixtures of any consumer of the City.

20.02 Definitions

City: Jackson Water Resources

Air-Gap Separation: The term "air-gap separation" means a physical break between a supply pipe and a receiving vessel. The air-gap shall be at least double the diameter of the supply pipe measured vertically above the top rim of the vessel, in no case less than one inch (1").

Approved Backflow Prevention Device: The term "Approved Backflow Prevention Device" shall mean devices which have passed laboratory and field evaluation tests performed by a recognized testing organization which has demonstrated their competency to perform such tests to the California Department of Public Health.

Approved Water Supply: The term "approved water supply" means any water supply whose potability is regulated by a State or local health City.

Auxiliary Supply: The term "auxiliary supply" means any water supply on or available to the premises that is connected or poses a reasonable likelihood of being connected other than the approved water supply.

AWWA Standard: The term "AWWA Standard" means an official standard developed and approved by the American Water Works Association (AWWA).

Backflow: The term "backflow" shall mean a flow condition caused by a differential in pressure that causes the flow of water or other liquids, gases, mixtures or substances into the distributing pipes of a potable supply of water from any source or sources other than an approved water supply source. Backsiphonage is one cause of backflow. Back pressure is the other cause.

Contamination: The term "contamination" means a degradation of the quality of the potable water by any foreign substance which creates a hazard to the public health, or which may impair the usefulness or quality of the water.

Cross Connection: The term "cross connection" means any unprotected actual or potential connection between a potable water system used to supply water for drinking purposes and any source or system containing unapproved water or substance that is not or cannot be approved as safe, wholesome and potable. Bypass arrangements, jumper connections, removable sections, swivel or changeover devices, or other devices through which backflow could occur, shall be considered cross connections.

Double Check Detector Check Valve Assembly: The term "double check detector check valve assembly" means an assembly of at least two independently acting check valves including flanged, full port resilient wedge shut off valves on each side of the check valve assembly, 5/8" x ¾" bypass meter, and test cocks available for testing the watertightness of each check valve.

Health Agency: The term "Health Agency" means the California Department of Public Health, or the local Health Agency with respect to a small water system.

Local Health Agency: The term "Local Health Agency" means the Amador County Environmental Health Department.

Person: The term "person" means an individual, corporation, company, association, partnership, municipality, public utility, or other public body or institution.

Premises: The term "premises" means any and all areas on a water user's property, which are served or have the potential to be served by the public water system.

Public Water System: The term "public water system" means a system for the provision of piped water to the public for human consumption that has five (5) or more service connections or regularly serves an average of twenty-five (25) individuals daily at least 60 days out of the year.

Reclaimed Water: The term "reclaimed water" means a wastewater which, as a result of treatment, is suitable for other than potable use.

Reduced Pressure Principle Backflow Prevention Device: The term "reduced pressure principle backflow prevention device" means a device incorporating two or more check valves and an automatically operating differential relief valve located between the two checks, a flanged, full port resilient wedge shut off valve on each side of the check valve assembly, and equipped with necessary test cocks for testing.

Service Connection: The term "service connection" refers to the point of connection of a user's piping to the water supplier's facilities.

Water Supplier: The term "water supplier" means the person who owns or operates the approved water supply system.

Water User: The term "water user" means any person obtaining water from an approved water supply system.

20.03 Cross Connection Protection Requirements

20.03.1 General Provisions

Unprotected cross connections with the public water supply are prohibited. Whenever backflow protection has been found necessary, the City will require the water user to install an approved backflow prevention device by and at his expense for continued services or before a new service will be granted.

Wherever backflow prevention has been found necessary on a water supply line entering a water user's premises, then any and all water supply lines from the City's mains entering such premises, buildings, or structures shall be protected by an approved backflow prevention device. The type of device to be installed will be in accordance with the requirements of this program.

20.03.2 Where Protection is Required

Each service connection from the City's water system for supplying water to premises having an auxiliary water supply shall be protected against backflow of water from the premises into the public water system unless the auxiliary water supply is accepted as an additional source by the City, and is approved by the public health Agency having jurisdiction.

Each service and fire connection from the City's water system for supplying water to any premises on which any substance is handled in such fashion as may allow its entry into the water system shall be protected against backflow of the water from the premises into the public system. This shall include the handling of process waters and waters originating from the City's water system which have been subjected to deterioration in sanitary quality.

Backflow prevention devices shall be installed on the service connection to all commercial buildings and any premises having (a) internal cross connections that cannot be permanently

corrected and controlled to the satisfaction of the state of local health department, or (b) intricate plumbing and piping arrangements or where entry to all portions of the premises is not readily accessible for inspection purposes, making it impracticable or impossible to ascertain whether or not cross connections exist.

Any other connection or use of water from the City's system, where protection of the City's system is in question (such as hydrant connections for construction purposes), shall have backflow protection.

20.03.3 Fire Protection Systems Using Chemicals

Antifreeze solutions must be water solutions of pure glycerin (C.P. or U.S.P., 96.5% grade) or propylene glycol conforming to Section 3-5.2.1 of NFPA-13, 1994 Edition. These shall be food-grade chemicals.

Antifreeze solutions must be tested and verification provided to ensure compliance with the above conditions.

Any other antifreeze solution shall not be permitted.

20.03.4 Type of Protection Required

The minimum types of backflow protection required to protect that approved water supply, at the user's water connection to premises with varying degrees of hazard are given below. Situations which are not covered below shall be evaluated on a case-by-case basis and the appropriate backflow protection shall be determined by the City.

Type of Backflow Protection Required

A. Reduced Pressure Principle Device is required for:
   - All non-residential applications.
   - Premises where there are irrigation systems into which fertilizers, herbicides or pesticides are, or can be, injected, spread or sprayed.
   - Premises where chemicals or contaminants may be introduced into the water system.
   - Fire protection systems using chemicals, per Section 20.03.3.
   - All services where there is an unopposed auxiliary water supply interconnected with the public water supply.
   - Residences where there is an unapproved auxiliary water supply (e.g., well) but not interconnected with public water systems.

B. Double Check/Detector Check Valve Assembly is required for:
   - Fire protection systems not using chemicals.

C. Double Check Valve Assembly is required for:
   - Two or more domestic service supplying water from different pressure zones to the same building, structure or premises through which an interstreet main flow may occur.

20.03.5 Cross-Connection Control Hazard Assessment

In order to be in compliance with Title 17 and its proposed changes, we have had to revise how we keep track of our cross-connection control issues. Cross-Connection control issues pertain to treated water facilities.

Assessment accounts would only be involved when a customer owns a rental and the testing requirements need to be tracked on the owner's account

JACKSON WATER RESOURCES
CROSS-CONNECTION CONTROL HAZARD ASSESSMENT

CUSTOMER INFORMATION (Please print legibly)		
Customer Name(s):	Account Number:	
Service Address:		
Legal Owner(s):	APN or Lot#:	Phone #:

QUESTIONNAIRE
(This form is to be used for existing and new services)

1. Who is completing this questionnaire?	☐ Legal Owner	☐ Renter	☐ Other

2. Is there (or do you plan to have) a business on the property? ☐ Yes ☐ No

If yes, please indicate the type of business. (e.g. hardware store, professional office etc.)

_____

Does (or will) this commercial property have a sprinkler system for landscaping? ☐ Yes ☐ No

Please indicate if any of the following activities occur (or will occur) at your place of business. (Check all that apply)

- ☐ Medical/Dental/Mortuary Services
- ☐ Manufacturing; Type:_____
- ☐ Chemical Handling; Type:_____
- ☐ Photo or Printing Services
- ☐ Other Biological, or Chemical Processing (Give brief description on back)

3. In addition to being served treated water from Jackson Water Resources, do you have an alternate source of water? ☐ Yes ☐ No (Please mark all that apply)

- ☐ Untreated Water from the Amador Canal or Ione Pipeline. Acct._____ (check this box if you have, or are applying for, a raw water service)
- ☐ Private Well.
- ☐ Pond, Spring, Canal, or Creek
- ☐ Swimming Pool, Hot Tub, Decorative Fountain or Pond.

4. Do you have (or plan to have) an auxiliary fire fighting system on your property? (i.e. fire sprinklers, fire meter, pumps etc.)	☐ Yes ☐ No
5. Do you have (or plan to have) a solar water heating system?	☐ Yes ☐ No
6. Do you have (or plan to have) any animal watering troughs on your property?	☐ Yes ☐ No
7. Do you utilize (or plan to utilize) a booster system for water pressure?	☐ Yes ☐ No

CERTIFICATION

I/we hereby certify that I/we am/are the ☐Owner(s) ☐ Renter(s) ☐ Other of the above-identified parcel, and the forgoing is true and correct to the best of my/our knowledge.

Signature	Signature
Print Name	Print Name
Phone Number	Date

20.04 Backflow Prevention Devices

20.04.1 Approved Devices

Only backflow prevention devices which have been approved by the California Department of Public Health shall be acceptable for installation by a water user connected to the City's potable water system. The City will provide, upon request, to any affected customer a list of approved backflow prevention devices.

20.04.2 Installation

Backflow prevention devices shall be installed in a manner prescribed in Section 7603, Title 22 of the California Administrative Code and as shown on Standard Drawings No. JW015 and JW016. Location of the devices should be as close as practical to the user's connection. The City shall have the final authority in determining the required location of a backflow prevention device.

20.04.3 Testing and Maintenance

The owners of any premises on which, or on account of which, backflow prevention devices are installed, shall have the devices tested by a person who is licensed and has demonstrated their competency in testing of these devices to the City. Backflow prevention devices must be tested at least annually and immediately after installation, relocation or repair. The City may require a more frequent testing schedule if it is determined to be necessary. No device shall be placed back in service unless it is functioning as required. A report in a form acceptable to the City shall be filed with the City each time a device is tested, relocated or repaired. These devices shall be serviced, overhauled or replaced whenever they are found to be defective and all costs of testing, repair and maintenance shall be borne by the water user.

20.04.4 Removal

Approval must be obtained from the City before a backflow prevention device is removed, relocated or replaced.

A. Removal: The use of a device may be discontinued and the device removed from service upon presentation of sufficient evidence to the City to verify that a hazard no longer exists or is not likely to be created in the future;

B. Relocation: A device may be relocated following confirmation by the City that the relocation will continue to provide the required protection and satisfy installation requirements. A retest will be required following the relocation of the device;

C. Repair: A device may be removed for repair, provided the water use is either discontinued until repair is completed and the device is returned to service, or the service connection is equipped with other backflow protection approved by the City. A retest will be required following the repair of the device; and

D. Replacement: A device may be removed and replaced provided the water use is discontinued until the replacement device is installed. All replacement devices must be approved by the City and must be commensurate with the degree of hazard involved.

21.00 PIPING AND PLUMBING: WATER

21.01 Treated Waterline Piping

Allowable treated waterline pipe materials shall be Ductile Iron Pipe, Polyvinyl Chloride (PVC) Pressure Pipe. Specifications for individual pipe materials are given below.

All pipe shall be designed for a minimum internal working pressure of 150 PSI or as otherwise specified by the City Engineer.

Design Conditions:

A. Trench width shall be one pipe outside diameter plus twelve inches (12”).
B. Bedding tamped to twelve inches (12”) above pipe, load factor 1.5.
C. Soil density one hundred thirty-five pounds per cubic foot (135 lbs./ft3).
D. Bedding angle ninety (90) degrees.
E. Live load AASHTO H-20, sixteen thousand pound (16,000 lbs.) wheel load.
F. Rigid pipe 1.5 factor of safety versus crushing.
G. Flexible pipe allowable deflection – as specified by pipe manufacturer.
H. Above design conditions apply to an empty conduit with no internal pressure.

Any waterline placed within the Caltrans Right of Way shall be Ductile Iron Pipe with a minimum cover of thirty-six inches (36”). The Contractor of work is required to obtain a separate Caltrans encroachment permit.

21.02 Pipeline Depths

Depth of cover to be minimum thirty-six inches (36”), except as listed below.

- 18” to 24” Cover: Use Ductile Iron Pipe only, encased in 2000 psi concrete.
- 24” to 36” Cover: Use C-900 Class 200 or Ductile Iron Pipe, encased in 2-sack sand slurry.
- No service connections or ARV shall be allowed where cover is less than 36” without special permission from the City Engineer.

Maximum trench bottom depth shall be six feet (6’).

21.03 Pipeline Types

21.03.1 Ductile Iron Pipe

21.03.1.1 Materials

Ductile iron water pipe shall conform to current AWWA C151 specifications, and shall be cement mortar lined per AWWA C104. Ductile iron pipe shall be class 50 unless otherwise required by the pressure, loading or as specified on the plans.

21.03.1.2 Joints

Joints that are aboveground, submerged, or located in vaults and structures shall be flanged. Joints in buried piping shall be of the restrained, slip-on or mechanical-joint type per AWWA C111 except where flanged joints are required to connect to valves, meters, and other equipment. Provide unrestrained buried joints except where restrained joints are specifically shown in the drawings. Restrained joints shall consist of a follower gland having a seal gasket and individually actuated wedges that increase their resistance to pullout as pressure or external forces increase. The system manufacturer shall provide all the components (follower ring, wedges, and gaskets) for the restraining device. The device shall be capable of full mechanical joint deflection during assembly and the flexibility of the joint shall be maintained after burial. Dimensions of the gland shall be such that it can be used with mechanical joint bells conforming to AWWA C111 and AWWA C153. Minimum rated pressure shall be 350 psi for sizes 15 inches and smaller. Products: Megalug Series 1100 as manufactured by EBAA Iron, Inc., or equal.

Assembly of pipe and joints shall follow the manufacturer's instructions. After assembly of each slip-on joint, the final location of rubber rings within each joint shall be checked by gauge as recommended by the manufacturer.

Joints between ductile iron pipe and other types of pipe shall be made by means of the proper sized and type compression adapter.

All ductile iron pipe joints shall be bonded as required in these specifications.

21.03.1.3 Fittings

Fittings shall conform to AWWA C110 with a minimum pressure rating of 250 psi. Mechanical joint fittings conforming to AWWA C153 may be used in lieu of AWWA C110 fittings. Mechanical joint ductile-iron fittings conforming to AWWA C110 (except for laying length) with a minimum pressure rating of 250 psi may also be used. Fittings shall be cement-mortar lined per AWWA C104 and shall be protected with bituminous coating.

21.03.1.4 Flanges

Flanges shall be solid back, Class 125 per AWWA C115. Flanges on pipe shall be either cast or threaded. Flanged pipe and fittings shall be shop fabricated, not field fabricated. Threaded flanges shall comply with AWWA C115. Flanges shall be individually fitted and machine tightened in the shop, then machined flat and perpendicular to the pipe barrel. Flanges shall be backfaced parallel to the face of the flange. Prior to assembly of the flange onto the pipe, apply a thread compound to the threads to provide a leak-free connection. There shall be zero leakage through the threads at a hydrostatic test pressure of 250 psi without the use of the gasket. Material for blind flanges shall be cast or ductile iron. Restrained flange adapters may be used in lieu of cast or threaded spool pieces. See Section 21.06.25.

21.03.2 Polyvinyl Chloride (PVC) Pressure Pipe

21.03.2.1 Small Diameter PVC

Polyvinyl Chloride (PVC) Pressure Pipe, four inches to twelve inches (4" x 12"), shall conform to current AWWA C900 and have Underwriters' Laboratories, Factory Mutual and NSF approval. PVC pipe shall be dimension ratio (DR) eighteen (18), Class 150 for internal working pressures up to one hundred thirty (130) PSI; use DR fourteen (14), Class 200 for internal working pressures between one hundred thirty (130) and one hundred eighty (180) PSI. For internal working pressures greater than one hundred eighty (180) PSI, pipe DR/Class shall be approved by the City Engineer.

21.03.2.2 Larger Diameter PVC

PVC pipe in sizes fourteen inches (14") through thirty-six (36"), shall conform to current AWWA C905 standards. Use dimension ratio (DR) twenty-six (26), pressure rating (PR) one hundred sixty (160) for internal working pressures up to one hundred thirty (130) PSI; use DR twenty one (21), PR two hundred (200) for internal working pressures between one hundred thirty (130) PSI and one hundred eighty (180) PSI. For internal working pressures greater than one hundred eighty (180) PSI, pipe DR/PR shall be approved by the City Engineer.

21.03.2.3 Joints

Lengths of PVC shall be joined by a locked-in flexible elastomeric gasket coupling with bell and spigot configuration. Lubricants intended for use with PVC pipe shall be compatible with the plastic material and not adversely affect the potable quality of the water being transported.

Joints between PVC pipe and fittings shall be slip-on type or mechanical type as shown on the plans. Slip-on type joints shall be sealed by means of rubber rings designated for use with the type of pipe being installed.

Joints between PVC pipe and other types of pipe shall be made by means of the proper sized compression type adapter.

21.03.2.4 Fittings

Fittings shall conform to AWWA C110 with a minimum pressure rating of 250 psi. Size bells specifically for OD of cast iron equivalent PVC pipe including rubber ring retaining groove. Mechanical joint fittings conforming to AWWA C153 may be used in lieu of AWWA C110 fittings. Fittings shall be cement-mortar lined cast or ductile iron fittings or fusion bonded epoxy lined and coated fabricated steel fittings.

21.03.3 Brass or Bronze Pipe & Fittings

Brass or bronze pipe shall conform to ASTM B43 and AB 1953.

21.03.4 Galvanized Steel Pipe

Galvanized steel pipe shall conform to ASTM A53.

21.04 Treated Water Service Piping

Meters shall be five-eighths inch (5/8”), three-fourths inch (¾”) and one inch (1”) served with one inch (1”) service piping. One inch (1”) service piping shall be polyethylene CTS.

One and one-half inch (1½”) and two inch (2”) meters shall be served with two inch (2”) service piping. Two inch (2”) service piping shall be polyethylene CTS.

Three inch (3”) and larger meters shall be served by four inch (4”) diameter or larger size piping. Allowable service piping for 3” and larger meters shall be polyvinyl chloride, or ductile iron pipe. Service lines larger than two inches (2”) shall have a buried service gate valve with two inch (2”) operating nut at the main.

Specifications for individual pipe materials are given below.

21.04.1 Polyethylene Pipe

Polyethylene CTS pipe shall be Westflex, Gold Label Plus, or approved equal.

21.04.2 Polyvinyl Chloride (PVC)

One and a half inch (1½”), two inch (2”), and three inch (3”) diameter PVC pipe shall be Schedule 80, and shall conform to ASTM Designation D1784 for rigid PVC compounds. It shall bear the National Sanitation Foundation seal of approval and shall conform with the requirements of commercial standard 256 and ASTM D2241. Pipe shall be manufactured to Iron Pipe Size (IPS) dimensions and furnished in minimum standard lengths of twenty feet (20’). Four inch (4”) and larger diameter polyvinyl chloride shall conform to current AWWA C900.

Unless otherwise required, all chemical feed piping three inches (3”) and smaller shall be schedule 80 PVC as specified in this section.

All PVC fittings shall be molded fittings manufactured of the same material as the pipe and shall be suitable for either solvent weld or screwed connections.

Solvent weld type couplings and fittings shall be of a pressure rating greater than that of the pipe and shall be of a type recommended by the pipe manufacturer. Priming and solvent welding of pipe and fittings shall be per manufacturer’s recommendations.

21.04.3 Ductile Iron Pipe

Ductile iron water pipe shall conform to current AWWA C151 specifications and shall be cement mortar lined per AWWA C104. Fittings shall be in accordance with AWWA C110 or C153 and shall be cement-mortar lined per AWWA C104. All ductile iron pipe and fittings shall be protected with bituminous coating.

21.05 Reserved

21.06 Valves and Appurtenances

21.06.1 Gate Valves

Gate valves, two inches (2”) to ten inches (10”) in diameter shall be resilient seated wedge type, two hundred (200) PSI WOG rated, and conform to AWWA specification C509. All interior ferrous surfaces shall be protected against corrosion by factory applied fusion-bonded epoxy coating, which shall be a minimum of eight (8) mils thick and per AWWA C550. Valves shall have a smooth inside bore on the bottom half so that sediment cannot accumulate. Valves shall open counter-clockwise. Valves installed underground shall have a non-rising stem and a two inch (2”) square operating nut that is accessible through a valve box. Valves installed above ground shall have outside stem and yolk (OS&Y), rising stem, and be handwheel operated.

Stems shall be Type 304 or 316 stainless steel or cast, forged, or rolled bronze. Stem nuts shall be made of solid bronze. Bronze shall conform to ASTM B 62 or ASTM B 584 (Alloy C83600).

Gate valves one and a half inches (1½”) and smaller shall be bronze, handwheel operated, non-rising stem, two hundred (200) PSI WOG.

Treated waterline valves two inches (2”) to ten inches (10”) shall be gate type. End connections for exposed gate valves 4” and larger shall be flanged. End connections for buried gate valves 4” and larger shall be mechanical joint, flanged, or mechanical joint by flanged type as required.

21.06.2 Butterfly Valves

All butterfly valves shall be rubber seated conforming to the requirements of AWWA Specification C504 Class 150B. Valves shall be short cast iron body type.

Valve shafts shall be Type 304 or 316 stainless steel. Valve shafts shall be stub shaft or one-piece units extending completely through the valve. Body bolts and nuts shall be Type 304 or 316 stainless steel. Where the rubber seat is applied to the disc, it shall be bonded to a stainless steel seat retaining ring which is clamped to the disc by Type 304 or 316 stainless steel screw fasteners. The rubber valve seat shall be secured to or retained in the valve body.

Valve disks shall be ductile iron ASTM A536 grade 65-45-12. The valve assembly shall be furnished with a non-adjustable factory set thrust bearing to center the disk at all times.

All butterfly valves shall be operated manually and shall open counter-clockwise. Valves installed underground shall be traveling nut operated with all gearing fully encased with a double stop feature and have a two inch (2”) square operating nut that is accessible through a valve box. Actuators on twelve inch (12”) to fourteen inch (14”) butterfly valves shall have ratings of four hundred fifty foot pounds (450’ lbs.) input torque at the open and closed stops without damage. Actuators shall be sized to provide sufficient output torque to operate the valve.

Valves installed above ground shall be flanged and be lever operated through eight inch (8”) and handwheel operated for larger sizes. The handwheels shall have a minimum diameter of eighteen inches (18”) and be fastened to the operating shaft with a cotter pin for easy removal.

Treated waterline valves twelve inches (12”) or larger shall be butterfly type. Butterfly valves four inches (4”) and larger shall be flanged with flange adaptors as required. All interior ferrous surfaces shall be protected against corrosion by a factory applied fusion-bonded epoxy coating which shall be a minimum of eight (8) mil thick per AWWA C550.

21.06.3 Tapping Valves

Flanged gate valves shall be used for hot tapping waterlines. All gate valves conform to these specifications.

21.06.4 Tapping Sleeves/Saddles

Tapping sleeves shall be entirely Type 304 Stainless Steel, including the flange, nuts and bolts, as manufactured by JCM, Ford or Romac. Tapping saddles shall be ductile iron as manufactured by Mueller.

21.06.5 Flanged Gaskets

Flanges four inches (4”) to thirty-six inches (36”) shall be one eighth of an inch (1/8”) thick SBR or Neoprene “Flange-Tyte” as manufactured by U.S. Pipe. No bonding Agent (i.e. Permatex) shall be used on the flange or gasket. The flange face shall be free of any foreign matter and/or rough surface.

21.06.6 Nuts and Bolts

Nuts and bolts, not specified elsewhere, shall be cadmium plated, zinc coated or Grade 2. They shall be coated with “Loctyte” anti-seize. The bolt shall extend at least three (3) threads through the nut and no more than one half inch (½”).

21.06.7 Service Saddles

Service saddles shall be bronze construction with wide strap and iron pipe thread. One inch shall be Jones J996, Ford S90 for PVC C900 or J979 for ductile iron pipe, Mueller, or Romac 101B; two inch shall be Jones, Ford FS 202, Mueller, or Romac 202B.

21.06.8 Corporation Stops

Corporation Stops shall be of bronze construction as manufactured by the James Jones Company, Mueller Company or Ford.

Inlet threads shall be male iron pipe threads. Outlet shall be copper tube size compression, or Mueller “Insta-tite.”

21.06.9 Plastic Film Wrap

This wrap shall be used around all buried valves, bolted flanges and other fittings. The polyethylene film shall be of virgin polyethylene as produced from DuPont Alathon resin and shall meet the requirements of ASTM Designation D1248 for Type 1, Class A, Grade E-1, and shall have a flow rate or nominal melt index of 0.4 g/min maximum.

The polyethylene film shall be minimum six (6) mils in thickness. The length shall be sufficient to firmly attach the film to the pipe on either side of the valve, flange or fitting with ten (10) mil tape or duct tape.

21.06.10 Meter Boxes

For meters smaller than one inch (1”), meters boxes shall be Christy B16 Utility Box with B16G lid with round hole for touch read port, lid shall be marked “Water.” For one inch (1”) to two inch (2”) meters, a Christy B30 or B36 Utility Box with round hole for touch read port lid shall be used, lid shall be marked “Water.” For three inch (3”) and larger meters, boxes shall be sized to allow adequate room for the meter, meter stop, gate valve and check valve. In all cases, the meter box shall be large enough for proper placement and reading of meter.

21.06.11 Angle Meter Stops

Angle Meter Stops shall have a locking wing and be of bronze construction manufactured by Mueller, James Jones, or Ford. Inlet shall be copper tube size compression or Mueller “Insta-Tite,” with a meter coupling nut outlet and locking wing. Angled meter stops greater than one inch (1”) shall have a flange connection to the meter.

21.06.12 Combination Air and Vacuum Release Valves

Air and vacuum release valves shall be combination air and vacuum release valves as manufactured by the Valve and Primer Corporation (APCO) 143C, 145C, etc., Crispin U10, 20, etc. or Val-Matic 201C, 202C, etc., bronze or stainless steel trim. Size shall be per these Specifications, as shown on the plans and/or Standard Drawing No. JW005. Boxes shall be sized as necessary.

Provide one inch (1”) AVRV with a minimum air release orifice diameter of 5/64” on line sizes up to twelve inches (12”) and two inches (2”) AVRV with a minimum air release orifice diameter of 3/32” on line sizes fourteen inches (14”) to eighteen inches (18”), the AVRV size shall be approved by the City Engineer.

Pipe taps for AVRV shall always be at actual high points of waterline, except as noted in 1.2.1.

21.06.13 Control Valves

Control valves include all pressure reducing and pressure relief valves. Control valves larger than two inches (2”) shall be of the diaphragm type with hydraulic pilot controls that are top mounted in the factory and tested prior to shipment as manufactured by Clayton. Control valves two inches (2”) and smaller shall be direct acting type. All control valves of any given type shall be supplied by one manufacturer. All operators shall be hydraulically controlled with manual overrides that can shut down on the valve without disrupting the spring setting on the pilot control.

Control valves shall be equipped with these features: Pilot line wye strainers, closing speed control, opening speed control, portion indicator and stainless steel ball shutoff valves (not on pressure relief valves), v-port seating, fusion epoxy coating (wetted parts only), stainless steel trim and stainless steel tubing.

All control valves require submittals, which shall be reviewed and approved prior to field installation.

21.06.13.1 Pressure Reducing Valves

Pressure Reducing Valves shall be a combination pressure reducing/pressure sustaining, Clayton Model 92-01.

21.06.13.2 Pressure Relief Valves

Valves shall be diaphragm type designed to maintain a steady upstream pressure by relieving excess pressure without causing line surges, Clayton Model 50G-01.

21.06.13.3 Altitude Valves

Altitude valves shall be hydraulic operated, diaphragm actuated, pilot controlled type. Valves shall be single-seated and have a resilient disc for tight closure. Valves shall be combination altitude and pressure-sustaining valves equipped with pressure sensitive closing, differential control, opening speed control. Valves shall be Clay-Val Type 210-01. Valves shall be furnished with options and featured similar to Pressure Control Valve requirements. For differential pressure higher than 60 PSI, valve shall be piston type or include and orifice plate.

21.06.14 Reserved

21.06.15 Ball Valves

21.06.15.1 Ball Valves (Copper Piping)

Ball valves two inches (2”) and smaller and which are used in copper piping systems shall have a bronze body, stem, side rings, disc rings and packing bolt, Teflon ball, seating and upper and lower packing.

21.06.15.2 Ball Valves (PVC, Galvanized & Brass Piping)

Ball Valves (PVC, Galvanized and Brass Piping) Threaded ball valves, 2 inches and smaller shall have bronze (ASTM B 62 or ASTM B 584, Alloy C83600 or C84400) body and plug ball retainer. Ball and stem shall be bronze (as specified for the body) or Type 316 stainless steel. Provide chrome plated ball, if ball is bronze. Valves shall have screwed ends (ANSI B1.20.1), non-blowout stems, reinforced Teflon seats, and have plastic-coated lever operators. Valves shall have a pressure rating of at least 300 psi WOG at a temperature of 150°F. Double true union thermoplastic ball valves, 3 inches and smaller shall be rated at a pressure of 150 psi at a temperature of 105°F. Body, ball, and stem shall be PVC conforming to ASTM D 1784, Type 1, Grade 1. Seats shall be Teflon. O-ring seals shall be EPDM. Valve ends shall be of the double-union design. Ends shall be socket welded except where threaded or flanged-end valves are specifically shown on the plans. Valves shall have handle for manual operation. Valves shall be as manufactured by Spears Manufacturing Company, or equal.

21.06.16 Globe Valves

Globe valves, 3 inches and smaller, shall be all bronze (ASTM B 62 or ASTM B 584, Alloy C83600) with screwed ends, union bonnet, inside screw, rising stem, and composition or PTFE disc. Valves shall have a pressure rating of at least 300 psi at a temperature of 150°F. Stem shall be bronze: ASTM B 371 (Alloy C69400), ASTM B 99 (Alloy C65100), or ASTM B 584 (Alloy C87600). Valves shall be Crane 7TF, or equal.

Globe valves larger than three inches (3”) shall be iron body with yoke bonnet and bronze trim and shall have a designated working pressure of 200 psi.

21.06.17 Solenoid Valves

Solenoid valves shall be two-way, full line size, normally closed, diaphragm type, one hundred twenty-five (125) minimum PSI body pressure, five (5) PSIG minimum operating differential for use with cold water or air. Solenoid valves shall have forged brass (Alloy C23000) or bronze (ASTM B 62) bodies with Teflon main seats. Internal plunger, core tube, plunger spring, and cage assembly shall be stainless steel (Types 302, 304, or 305). Seals shall be Teflon. Valve shall be suitable for one hundred fifteen (115) volt, sixty (60) Hz AC power supply, and shall be as manufactured by Automatic ASCO Switch Company, Model 8210, or equal.

All solenoid valves shall have manual operators, encapsulated coils and shall have electrical characteristics as indicated on the drawings. All valves shall be mounted horizontally.

21.06.18 Swing Check Valves

Swing check valves one and a half inches (1½”) and smaller and smaller shall be Class 125, wye pattern, bronze, ASTM B 61, B 62, or B 584 (Alloy C83600). Ends shall be female threaded, ANSI B1.20.1. Disc shall be bronze, swing type. Minimum working pressure shall be 200 psi WOG at a temperature of 150°F. 1½” and smaller swing check valves shall be Crane Model 37, or equal.

Swing check valves for waterlines two inches (2”) and larger shall be cast iron (ASTM A 48, Class 30, or ASTM A 126, Class B) body and cover. Flapper shall consist of a steel disk insert and a steel bar hinge covered with Buna-N vulcanized to the metal pieces. Provide O-ring seal vulcanized onto the disk. Valve shall be designed for a working pressure of not less than one hundred seventy-five (175) PSI and tested at three hundred fifty (350) PSI. They shall be of the balanced, swing gate type with a clear opening at least equal to that of the connecting pipe and shall have an external lever and counter weight. Cast in place or pre-cast concrete vaults will be required for all buried swing check valve installations. 2” and larger swing check valves shall be APCO Series 100R or equal.

21.06.19 Valve Boxes

Valve boxes shall be provided for all underground valves and shall be pre-cast concrete, broods or Christy G5 Traffic Valves boxes. Lids shall be cast iron traffic type G5C and marked “WATER.” If noted on the plans additional markings may be necessary.

21.06.20 Valve Riser Extensions

Eight inch (8”) diameter PVC conforming to AWWA Section C900 water pipe or SDR35 sewer pipe shall be used and installed as shown on Standard Drawing NO. JW004.

21.06.21 Strainers

Unless otherwise noted, air and gas line strainers shall be Y-pattern bronze body, with 40 mesh screen packed with copper or stainless steel wool. Air line strainers shall be fitted with a brass blowoff cock.

Unless otherwise noted, water line strainers shall by Y-pattern, iron body with 20 mesh Monel screen, and fitted with a brass blowoff cock.

21.06.22 Pressure Gauges

Unless otherwise noted, pressure gauges shall be stainless steel bourdon type with a two and a half inch (2½”) diameter dial and black alumalite cases suitable for mounting as required. Pressure range and calibrations shall be as required and the dial shall be engraved with the units in which the gauge is calibrated. All pressure gauges shall be glycerin filled.

Pressure gauges shall be rated for service intended, including negative pressure (vacuum gauge or compound gauge). All pressure gauges shall be installed with a brass isolation valves and blowoff valve. Full scale pressure range shall be approximately twice the normal operating pressure. The normal operating pressure should not exceed seventy-five percent (75%) of the full range scale.

21.06.23 Locating Cable & Locator Tape

Direct burial copper wire solid, Soft Drawn No. 10 insulated, shall be taped to the top of pipe every ten (10) feet, before backfilling. The wire shall be procured from the vendor complete with an approved splice and insulation kit and cable joints shall be spliced in accordance with the manufacturer's instruction to form a set of continuous electrical conductors throughout the pipe system. Where pipe branches occur, the wire shall be branched also so that wire is provided to each valve, fire hydrant, all other appurtenances and to the locating wire of the branch if the existing branch has one.

All water pipe shall be marked with a 3" blue metallic locator tape, located 12" directly above the pipe and bedding material. The tape shall be marked with 1½" black "CAUTION – WATER LINE BURIED BELOW" lettering and be placed face up in the trench.

21.06.24 Flexible Couplings

Flexible couplings shall have a minimum pressure rating equal to the pipe class. Care shall be taken to see that smooth surfaces have been provided on the pipe so that the coupling can be properly fitted. Flexible couplings for cast iron, ductile iron, PVC or AC pipe shall be Smith-Blair Model 411, 437, 441 or equal. Transition couplings shall be Smith-Blair Model 413, 437, 441 or equal. Reducing couplings shall only be used where approved of by the City Engineer and shall be Smith-Blair Model 415, R441, or equal.

21.06.25 Flanged Coupling Adapters

Flange adapters shall be made of ductile iron conforming to ASTM A536 and have flange bolt circles that are compatible with AWWA C115.15 For PVC pipe, the flange adapter shall have a pressure rating equal to or greater than the pipe. For Ductile Iron pipe, the flange adapter shall have a minimum safety factor of 2:1. The flange adapter shall be Series 2100 Megaflange adapter by EBAA Iron, Inc., or approved equal.

21.06.26 Rubber Expansion Joints

Rubber expansion joints, which allow expansion and control vibration when connecting rigid piping to pumps and other mechanical equipment, shall be Perflex 980, Series 110 or 111, Holz Rubber Company, Lodi, California.

21.06.27 Fire Hydrants

Fire hydrants shall be wet barrel type for installations below two thousand feet (2000') in elevation, and meet AWWA Standard C503. Unless otherwise indicated on the Plans or as required by the governing fire district, all hydrants shall have one four and a half inch (4½") and two, two and a half inch (2 ½") outlet with National Standard Fire Hose Threads. Where fire flow requirements exceed three thousand (3000) GPM, two four and a half inch (4½") and one two and a half inch (2½") outlet will be required along with special design considerations as

determined by the City and the governing fire district. All guard posts shall be painted OSHA Safety Yellow, five (5) mils minimum.

Approved Hydrants:
Wet Barrel – Clow 860 Ranger

An approved equal to the fire hydrant already accepted by the City may be installed provided that the City Engineer reviews and approves the fire hydrant in writing. For every one to five (1-5) hydrants installed, and for every five (5) hydrants thereafter, contractor shall provide a complete rebuilding kit including but not limited to all special tools, o-rings, gaskets, seats, seals, caps, shear and clevis pins, bolts, nuts, nozzles washers, safety couplings, bonnets, stems, oils, sleeves, greases and break-a-way spool prior to the installation of the hydrant.

21.06.28 Sampling Stations

Sampling stations shall have a twenty-four inch (24") bury, with a three quarter inch (¾") FIP inlet and a three quarter inch (¾") unthreaded nozzle. All stations shall be enclosed in a lockable, non-removable aluminum housing. When opened, the station shall require no key for operation, and the water will flow in an all brass waterway. All working parts will also be of brass or stainless steel and be removable from above ground with no digging. The exterior piping will be brass. Unless otherwise approved by the City, all sampling stations shall be Station Guard XLT manufactured by Koraleen Enterprises, as per Standard Drawing No. JW012. All piping shall be protected with closed cell pipe insulation, minimum 1" thick.

21.07 Backflow Devices

All backflow prevention assemblies shall be as approved by the State of California Department of Public Health. All backflow assemblies shall be installed above ground. See Standard Drawing No. JW015 and JW016.

21.08 Installation and Testing

21.08.1 Location of Existing and New Utilities

Location of all utilities shown on plans is approximate. At least two working days prior to starting work on the project, Underground Service Alert (USA) shall be contacted at (800) 227-2600 and Western Underground Utility Alert (WUUA) shall be contacted at (800)424-3447 for location by the Contractor. The locations of various utilities shown on the plans are solely an accommodation to the Contractor without any representation or guarantee concerning completeness and/or accuracy. The Contractor is responsible for ascertaining the location of, and providing protection for, all utilities to be encountered in the performance of the required work.

21.08.2 Quality Control

The Contractor shall use appropriate quality control procedures to ensure that all pipe and fittings shall be of the first grade and quality conforming to these Specifications. Pipe shall be stored and transported in a proper manner and kept clean after delivery to the job site. All work on pipe

shall be performed in a skillful and professional manner in accordance with the manufacturer's recommendations.

21.08.3 Laying of Pipe

Pipe trenching and/or excavations shall not be permitted until the site has been brought to finish grade or the roadway has been brought to subgrade.

Pipe shall be laid and joined in accordance with manufacturer's and/or City Engineer's directions. Necessary facilities including slings shall be provided for lowering and properly placing pipe sections into the trench without damage.

Each section of pipe shall be thoroughly cleaned before it is lowered into the trench.

If clean pipe sections and fittings cannot be placed in the trench without getting dirt into open pipe, the City Engineer may require a piece of material to be tied over the ends of the pipe or fitting until it has been lowered into position in the trench. After the pipe has been lowered the trench, all foreign matter shall be completely brushed from the pipe ends before assembly.

The pipe shall be cut to provide closure pieces of correct lengths to permit the proper location of the pipe sections, or to locate valves, fittings and appurtenant structures where specified on plans.

The pipe and fittings shall be laid to the lines and grades specified on plans, and centered in the trench. All horizontal and/or vertical bends consisting of eleven and one fourth (11¼) or more shall have thrust blocks as shown on Standard Drawing No. JW013.

Trenches must be kept dry until pipe has been laid, joints closed and backfill completed to a depth of one foot (1') above top of pipe. Crushed rock for drainage and/or bedding shall be provided as necessary.

Temporary water tight plugs shall be provided for closure of the open ends of the pipelines each time pipe laying activity stops and at the end of each working day to prevent the entry of dirt and/or other contaminants.

21.08.4 Bedding and Backfill

Bedding and backfill in pipe trenches shall be of the type, placement and compaction as shown in Standard Drawing No. JW002. Pipe shall be bedded/laid on six inches (6") of approved imported sand. Material placed from trench bottom to twelve inches (12") above top of pipe shall be imported sand. See JW002 for additional requirements regarding trenching and backfilling.

Sub grade and final grade materials and compaction shall be as designated by the roadway controlling City/district/etc.

All backfill shall be carefully placed and spread in uniform eight inches (8") maximum horizontal layers (lifts). Backfill shall be placed to about the same elevation on both sides of the pipe to prevent unequal loading and displacement of pipe. If compaction tests indicate insufficient density of the completed backfill in the trench, the Contractor shall be required to remove the backfill, and re-compact the backfill until the proper density is obtained at the Contractor's expense. Backfill shall be placed to a minimum depth of thirty-six inches (36") above the top of the pipe.

21.08.5 Connections to Existing Pipelines

All connections to existing pipelines shall be made as shown on the plans and in accordance with these Specifications and as approved by City Inspector.

Where the existing main is provided with fittings for connecting to the new main, the face of the connection shall be clean and free of all foreign materials. The Contractor shall remove the plug, cap or blind flange, clean the ends and make the new joint.

Where the existing main is not provided with fittings for connecting to the new main, connections shall be made either by hot tap or by cutting and inserting sections of pipe and fittings, as shown on the plans or as directed by the City Engineer.

For hot tap installations, the tapping saddle shall have a test plug and shall be air tested at fifty (50) PSI for five (5) minutes. Tapping valves shall be flange by flange. All hot taps shall be witnessed by the City Inspector.

When deemed necessary by the City Engineer, shutdowns of existing in-service pipeline and other distribution facilities shall be made by the City as required to complete pipeline connections. A shutdown shall be for as short a period as amount of lead time necessary for shutdown and connection to existing mains varies with each job and must be planned accordingly. Unless dictated by water system consideration, or emergencies, in no case will a shutdown and/or connection be scheduled with less than seven (7) days notice. Interference with the operation of the City's distribution system shall be kept at a minimum. While an existing pipeline is shut down, the connection work shall be performed without interruption, continuing after regular working hours if necessary, until completed, unless otherwise directed by the City Engineer. In some cases, shutdowns must occur at times other than normal working hours and/or days. All costs for labor, equipment and meals shall be the responsibility of the Contractor.

In all cases, shutdowns shall be made under the direction of the City Engineer. The City shall close all valves in making a shutdown and shall open all valves to restore pressure to the existing main, as well as initiate pressure to the new installation.

The City Engineer shall be notified at least seven (7) working days prior to any connection operations so that advance preparation on the part of the City can be made, and shall confirm such advance notice in writing. In no case shall any connection operations occur prior to passing pressure and bacteria tests.

21.08.6 Abandonment of Existing Facilities

Existing facilities shall be abandoned as indicated on the plans and specifications.
Ends of pipelines four inches (4") and larger to be abandoned in place shall be plugged with concrete for a distance of not less than twelve inches (12"), unless otherwise shown on the plans. Valve boxes to be abandoned shall be removed and the valve risers shall be filled with concrete.

21.08.7 Hydrostatic Testing

The City Engineer shall be notified forty-eight (48) hours prior to testing and must approve any water placement in any portion of the pipeline. The pipeline shall be filled with water and all air evacuated.

For treated water lines, the pressure shall then be slowly increased to one hundred fifty (150) PSI or one hundred fifty percent (150%) of working pressure, whichever is greater. The test pressure shall be maintained for measuring the quantity of water required to maintain full pressure in the line for the test period of two (2) hours.

The maximum allowable leakage shall be per the pipe manufacturer's recommendations or as directed by the City Engineer, whichever is more stringent.

21.08.7.1 Allowable Leakage of PVC Pipe

Allowable leakage for PVC pipe shall be determined from the following equation:

$$L = \frac{SD(P^{1/2})}{148000}$$

Where:
L = Allowable Leakage (gal/hr)
S = Length of Pipe Tested (ft)
D = Nominal Diameter of Pipe (in)
P = Average Test Pressure (PSI)

The table below provides a summary of the allowable leakage per one thousand feet (1000') for various pipe sizes and pressures calculated from the equation above.

Allowable Leakage for PVC Plastic Pipe
With Elastomeric Joints
Gallons per hour per 1000 LF

Nominal Pipe Size (Inches)	Average Test Pressure in Line (PSI)			
	100	150	200	250
4	.27	.33	.38	.43
6	.45	.50	.57	.64
8	.54	.66	.76	.85
10	.68	.83	.96	1.07
12	.81	.99	1.15	1.28

21.08.7.2 Allowable Leakage of DIP Pipe

Allowable leakage for DIP shall be determined from the following equation:

$$L = \frac{SD(P^{1/2})}{133200}$$

Where: L = Allowable Leakage (gal/hr)
S = Length of Pipe Tested (ft)
D = Nominal Diameter of Pipe (in)
P = Average Test Pressure (PSI)

The table below provides a summary of the allowable leakage per one thousand (1000) LF for various pipe sizes and pressures calculated from the equation above.

Allowable Leakage for DIP
With Elastomeric Joints
Gallons per hour per 1000 LF

Nominal Pipe Size (Inches)	Average Test Pressure in Line (PSI)			
	100	150	200	250
4	.3	.37	.43	.74
6	.45	.55	.64	.71
8	.60	.74	.85	.95
10	.75	.92	1.06	1.19
12	.90	1.10	1.28	1.42

All or part of the pipeline may be drained as necessary to repair leaks. All leaks shall be repaired in a manner approved by the City Engineer and retested before acceptance by the City. The Contractor shall provide all labor, equipment and materials required for filling and testing the pipelines. After successful completion of the hydrostatic test, the chlorination flushing, bacteriological test and high velocity flushing may be completed per these specifications.

21.08.8 Disinfection/Chlorination and Flushing

After successful completion of the hydrostatic test, the Contractor shall chlorinate the pipeline per AWWA C651-99 by one of three methods including: the tablet method, the continuous-feed method and the slug method. The City Engineer shall approve which method is most suitable for each situation considering length and diameter of pipeline, type of joints present, availability of materials and safety considerations. The interior of all pipe and fittings used in making final connections shall be swabbed or sprayed with 1% hypochlorite solution. The chlorinated water shall be retained in the main for at least twenty-four (24) hours. At the end of this twenty-four (24) hour period the treated water in all portions of the main and appurtenances shall have a residual of not less than twenty-five parts per million (25ppm). During the hold time, new valves shall be exercised to promote disinfection of the appurtenances.

After chlorination the pipeline shall be flushed and de-chlorinated per AWWA C651-99 Section 4.5. Flushing shall continue until the chlorine residual in the water leaving the main is no higher than that of the existing distribution system or 0.3 ppm. The water shall then remain unmoved for a minimum of forty-eight (48) hours after which the City shall collect bacteriological samples which shall be tested by an independent laboratory. The number and location of samples shall be approved by the City Engineer and shall be as per AWWA C651-99, Section 5.1. If emergency work is under way, disinfection is to be per AWWA C651-99 Section 4.7.

The Contractor shall make the necessary piping connections and furnish and install all necessary equipment required for the high velocity flushing operations. The Contractor shall provide for safe and legal disposal of water from such flushings. The Contractor shall remove all temporary flushing facilities. All costs for chlorination bacteriological testing and flushing shall be paid by the Contractor or MLX applicant.

The table below lists the AWWA recommended number of five (5) gram calcium hypochlorite tablets required to provide a residual concentration of twenty-five milligrams per liter (25 mg/l). The listing of this table is for reference purposes only.

Number of Five Gram (5g) Calcium Hypochlorite Tablets
Required for a Dose of 25 mg/l
Length of Pipe Section (feet)*

Pipe Diameter (inches)	Length of Pipe Section (feet)				
	13 or less	18	20	30	40
	Number of 5 gram Calcium Hypochlorite Tablets				
4	1	1	1	1	1
6	1	1	1	2	2
8	1	2	2	3	4
10	2	3	3	4	5
12	3	4	4	6	7
16	4	6	7	10	13

* Based on 3.25g available chlorine per tablet; any portion of tablet rounded to next higher number.

21.08.9 Continuity Testing

The Contractor shall test for the continuity of the locating wire at time of final walk-thru. The Contractor shall provide all labor, equipment and materials required for testing the continuity of the locating wire at each meter, valve, fire hydrant, blow off and AVRV. Should continuity not be present and/or observed, the Contractor shall repair, replace and retest as necessary, entirely at Contractor's expense.

21.08.10 Facility markers

Whenever any water facilities are located outside of traveled roadways, approved facility markers shall be installed unless otherwise approved by the City Engineer. Facility markers shall be placed every five hundred feet (500'), at horizontal angle points, valves, ARVs, blow offs or any other appurtenances. Facility markers shall conform to Standard Drawing No. JW003.

22.00 BORING, JACKING AND TUNNELING: WATER

Allowable casings shall be steel. Alternate casings may be permitted by the City Engineer if they meet or exceed steel strength specifications and pose no health or safety hazards. Lap weld or corrugated pipe shall not be used for boring nor open cut casing. Casing shall be of a size to permit installation and removal of the carrier pipe. Multiple casing installations shall conform to the latest revised copy of the California Department of Transportation's specifications.

When practical, the bores and tunnels shall be installed before open cut carrier pipe. If (due to permits, etc.) it is not possible to install bores or tunnels at the start of construction, then one hundred feet (100') of carrier pipe at the bore pit side, and three hundred feet (300') at the receiving pit side shall not be constructed until after completion of the bore or tunnel.

For casing pipe crossing under roadways, railroads, or other installations not within the jurisdiction of the City, comply with regulations and permit requirements of said authority.

State highway casing installations shall be as specified in the California Department of Transportation specifications.

Casing installations for railroads shall be as specified by the American Railway Engineering Association, Part 5, Section 5.2, "Specifications for Pipelines Conveying Non-Flammable Substances."

22.01 Reserved

22.02 Steel Casing

Fabrication of casing shall be in accordance with AWWA C200, as modified below. Casing material shall conform to ASTM A 283, Grade C; ASTM A 139, Grade B; or ASTM A 36. Spiral weld steel casing shall have three sixteenths of an inch (3/16) maximum weld height over plate thickness. Spiral welds shall be one hundred percent (100%) of the welds.

22.02.1 Outside Diameter Tolerances

The outside diameter (O.D.) shall not vary by more than the following (percent of O.D.):

6" O.D. through 18" O.D.	+0.75%	-0.75%
20" O.D. and larger	+1.00%	-1.00%

For casing used in any one bore, maximum variation between maximum and minimum outside diameter shall not exceed a quarter inch (¼") for six inches (6") O.D. to forty-eight inches (48") O.D. and one half inch (½") for over forty-eight inches (48") O.D.

22.02.2 Wall Thickness Tolerances

The wall thickness in any one location on the casing shall not vary from the required thickness by more than the following (percent of wall thickness):

6” through 18”	+15.0%	-10.0%
23” and larger	+17.5%	-10.0%

22.02.3 Wall Thickness Minimum

Minimum wall thickness for steel pipe casing shall be as shown on the table that follows. However, in no case shall wall thickness be less than a quarter inch (¼”).

The Contractor may select a greater thickness and diameter to accommodate the method of work, loadings involved, the site and possible interferences, but at no additional cost to City.

Minimum Casing Dimensions
(Smooth Steel Pipe)

Diameter Pipe	Min. Casing Diameter	Length (1’-100’)	Length (100’-200’)	Length (Over 200’)
6”	18”	¼”	Max Length 100’	
8” – 10”	20”	¼”	Max Length 120’	
12” – 14”	24”	¼”	$^{3}/_{8}$”	Max Length 150’
16” – 18”	30”	¼”	$^{3}/_{8}$”	Max Length 200’
20” – 26”	36”	¼”	$^{5}/_{16}$”	$^{3}/_{8}$”
28” – 32”	42”	$^{5}/_{16}$”	$^{3}/_{8}$”	½”
34” – 40”	TBD	$^{3}/_{8}$”	$^{3}/_{8}$”	½”
42” – 48”	TBD	$^{3}/_{8}$”	½”	½”
50” – 60”	TBD	$^{3}/_{8}$”	½”	½”
Over 60”	TBD	$^{5}/_{8}$”	$^{5}/_{8}$”	¾”

* Lengths listed as “Maximum” may be exceeded, if ground conditions are favorable, and the City Engineer can give larger alignment tolerances than shown in Section 22.06.

For six inches to forty inches (6”-40”), a heavy wall lead joint may be required due to adverse ground conditions. If a heavy wall lead joint is required, it should be ten feet (10’) long, but must be one (1) diameter long, and shall have a minimum wall thickness of one and a half (1½) times the wall thickness of the casing being used.

22.02.4 Casing Surface Conditions

Casing shall be bare or coated with pneumatically applied enamel. The enamel coating is not required, but when it is used, it shall not exceed three (3) mils in thickness. No wrapped casing shall be allowed.

22.02.5 Lengths and Ends

Unless otherwise approved, the casing shall be square cut by mechanical methods. Torches held by machinery shall be considered to meet this requirement. This does not apply to field cutting. All casing lengths shall be equal to the auger length.

22.02.6 Straightness

Casing shall be measured by the cord method with either string or wire stretched taut to take out all visible sag. Maximum cord measured along the casing shall be true length x 0.02 percent. This is to be measured on actual lengths before loading for delivery to the job site.

22.02.7 Welding

All welding shall be done by qualified welders in accordance with the requirements of the American Welding Society (AWS). Welders and welding operations shall be qualified by tests as prescribed in AWS D.1.1. Section 5. Proposed operators may be examined at the site of work and upon satisfactory completion of test welds, designated by the Engineer, may be permitted to perform welding operations on the project. The Contractor shall furnish to the City upon request records the welder has been engaged in similar processes of welding for which he/she is pre-qualified for a period of six (6) months prior to the work and records of all welding test results and certifications of any welder prior to and during that period.

22.03 Grouting

Fittings shall be put at the proper position to fill all known cavities. When grouting, the road or railroad surface, the casing being installed shall be watched closely so that the road, railroad surface, casing or other structure(s) nearby, are not altered or damaged. Grouting pressure shall be the minimum pressure to feed the grout, but in no case shall it be more and four (4) PSI measured at the grouting fitting. For safety reasons, the minimum size casing allowable for inside grouting shall be thirty inches (30”). Grouting shall be necessary only if there is reason to believe that voids, exceeding one inch (1”) over the outside diameter of casing or liner plate, are present. If grouting is required, grout fittings shall be at a maximum of two (2) rows. Each row shall be twenty-two and a half (22½) degrees off top center, one (1) row left and one (1) row right. If casing joints are ten feet (10’) or in multiples of ten feet (10’), each row shall have fittings spaced at a minimum of ten feet (10’) on centers, staggered so there is one fitting for every five lineal feet (5 LF) of casing.

If the casing joints are eight feet (8’) or in multiples of eight feet (8’), each row shall have fittings spaced at a minimum of eight feet (8’), on centers, staggered so one fitting for every four lineal feet (4 LF) of casing. In tunneling, when liner plates or sets are used, the fittings shall be placed uniformly in sets, but shall not exceed the five lineal feet (5 LF) on centers specified as maximum spacing. Small casings shall be grouted from top of ground in severe conditions only, and shall be five feet (5’) on centers on center line of casing. Reinforced concrete pipe (RCP) grout fittings shall be at least two feet (2’) from edge of the joint. After completion of grouting, close the grout connections with cast-iron threaded plugs.

22.04 Wing Cutters/Bands/Flairs

Wing cutters, if they are used shall cut a maximum of one inch (1") larger than the casing measured on the outside diameter. Any voids that occur from the use of wing cutters are required to be grouted in accordance with Section 22.03. Bands or flairs shall not create a hole over one inch (1") larger than the outside diameter of the casing.

22.05 Jacking and Receiving Pits

Casing placed within conventional highways shall extend five feet (5') from the back of the curb on one side to five feet (5') in the back of the curb on the opposite side, or to the right-of-way of the road line if less than five feet (5'). Where Portland cement concrete (PCC) cross-gutter exists, the casing shall extend at least five feet (5') beyond the back of the cross-gutter. In rural areas, the distance from the edge of the pavement to each end of the bore shall be ten feet (10') or five feet (5') beyond the outside toe of the slope. Jacking and Receiving Pits shall conform to these specifications or to the Roadway Authority's requirements, whichever is more stringent.

All boring, jacking, and receiving pits shall be:

A. Located at least 10 feet from edge of pavement in rural areas;
B. Located 5 feet behind concrete curb or asphalt concrete (AC) dike in urban areas;
C. Located five feet (5') outside toe of slope in embankment areas;
D. Adequately shored in accordance with STATE-OSHA or FED-OSHA.

22.06 Alignment Tolerances

The centerline of the casing shall not vary in line or grade from the desired alignment by more than one percent (1%).

22.07 Rotary Drilling

The face must be mechanically cut (not cut with fluid pressure); the water must be mixed with bentonite, as required by ground conditions; the fluid must be supplied to the face from a controlled tank. (Under no circumstances shall the fluid line be hooked directly to the water system or the water truck while drilling); the controlled tank must be able to mix and agitate the fluid; the controlled tank must also be capable of regulating volume and pressure; and the fluid mix shall be used only for lubrication and to bring back cuttings, not to cut the face. This method can be used for various sizes, lengths and ground conditions.

22.08 Casing Insulators/Spacers

Lined steel casing insulators with plastic runners or skids shall be used to support and insulate the carrier pipe within the casing. The size, type, spacing, installation and manufacture of these insulators shall be per the manufacturer's recommendations and these Specifications. If a discrepancy exists between the two, these Specifications shall override. Casing insulators shall be by PSI, Inc., cascade Waterworks Mfg. Co., Calpico Inc., or approved equal.

22.08.1 Band/Shell

The bank, shell, or body of the insulator shall be constructed of fourteen (14) gage 304 stainless steel, or shall be hot rolled, pickled, fourteen (14) gage steel with a coating of rust inhibiting enamel or hot fused PVC.

22.08.2 Connecting Flanges

The connecting flanges shall be of the same material as the shell and shall be ribbed or gusseted for rigidity.

22.08.3 Bolts/Studs

All bolts or studs shall be five sixteenths of an inch (5/16”) or larger in diameter and shall be cadmium plated steel or stainless steel.

22.08.4 Insulating Liner

The insulator shall have an insulating liner made of Polyvinyl Chloride. It shall have a thickness of 0.090 inches or greater and shall be 85-90 durometer.

22.08.5 Skids/Runners

The insulator shall have high density plastic skids. The skids shall have a high resistance to abrasion and a low coefficient of friction. The skids may be supported by a riser to be of the same material as the shell and welded thoroughly to the shell. The skids shall be either bolted or have a stud welded connection to the shell or riser. Glued connections are not acceptable.

Skids shall be greased before installation of carrier pipe into casing.

22.09 Carrier Pipe

Carrier pipe shall be ductile iron pipe. All carrier pipe joints shall be restrained using a method approved by the City Engineer.

23.00 STANDARD DETAILS: WATER

Index of Standard Water Detail Drawings

Water Symbols Legend JW001
Pipe Trench Bedding and Back Fill JW002
Water Facility Marker JW003
Valve and Locating Wire Installation JW004
Combination Air & Vacuum Release JW005
Fire Hydrant & Blow Off Assembly JW006
Fire Hydrant Plan JW007
Standard Service Connection JW009
Valve Operating Nut Extension JW010
Sewer / Water Line Crossing JW011
Sewer / Water Line Paralleling JW011A
Water Quality Sampling Station JW012
Thrust Block Details JW013
Casing & Carrier Pipe JW014
Back Flow Prevention Assembly for Fire Flow or Other Systems JW015
Back Flow Prevention Assembly JW016
Standard Blow Off JW017
Temporary Dead End JW018
Pressure Reducing Station Layout JW019

EXISTING		PROPOSED	
8"	DOMESTIC PIPELINE WITH SIZE	8"	DOMESTIC PIPELINE WITH SIZE
	GATE VALVE		GATE VALVE
	BUTTERFLY VALVE		BUTTERFLY VALVE
8" 6"	REDUCER	8" 6"	REDUCER
	CHECK VALVE		CHECK VALVE
4"	PRESSURE REDUCING VALVE WITH SIZE	4"	PRESSURE REDUCING VALVE WITH SIZE
A	ALTITUDE VALVE	A	ALTITUDE VALVE
4"	PRESSURE RELIEF VALVE WITH SIZE	4"	PRESSURE RELIEF VALVE WITH SIZE
	SERVICE LATERAL		SERVICE LATERAL
	SAMPLING STATION		SAMPLING STATION
	AIR/VACUUM RELEASE VALVE		AIR/VACUUM RELEASE VALVE
2"	BLOWOFF WITH SIZE	2"	BLOW–OFF–VALVE WITH SIZE
DC	DOUBLE CHECK VALVE ASSEMBLY	DC	DOUBLE CHECK VALVE ASSEMBLY
DCDA	DOUBLE CHECK–DETECTOR CHECK VALVE ASSEMBLY	DCDA	DOUBLE CHECK–DETECTOR CHECK VALVE ASSEMBLY
RP	REDUCED PRESSURE PRINCIPAL BACK FLOW PREVENTION ASSEMBLY	RP	REDUCED PRESSURE PRINCIPAL BACK FLOW PREVENTION ASSEMBLY
RPDA	REDUCED PRESSURE PRINCIPAL DETECTOR ASSEMBLY	RPDA	REDUCED PRESSURE PRINCIPAL DETECTOR ASSEMBLY
	FIRE HYDRANT		FIRE HYDRANT
	WHARF HYDRANT		WHARF HYDRANT
	PUMP		PUMP
RP	HYDROPNEUMATIC TANK	RP	HYDROPNEUMATIC TANK
TS	TELEMETRY STATION	TS	TELEMETRY STATION

NOTES:

1. THESE SYMBOLS SHALL BE USED ON ALL PLANS TO BE APPROVED BY THE J.W.R.
2. VALVE SIZE IS SAME AS LINE SIZE UNLESS OTHERWISE NOTED.

WATER SYMBOLS LEGEND

DRAWN BY: FWW	SCALE: N.T.S.	DRAWING NO.: JW001	REV.:
APPROVED: RTW	DATE: 01/07/09		

JACKSON WATER RESOURCES

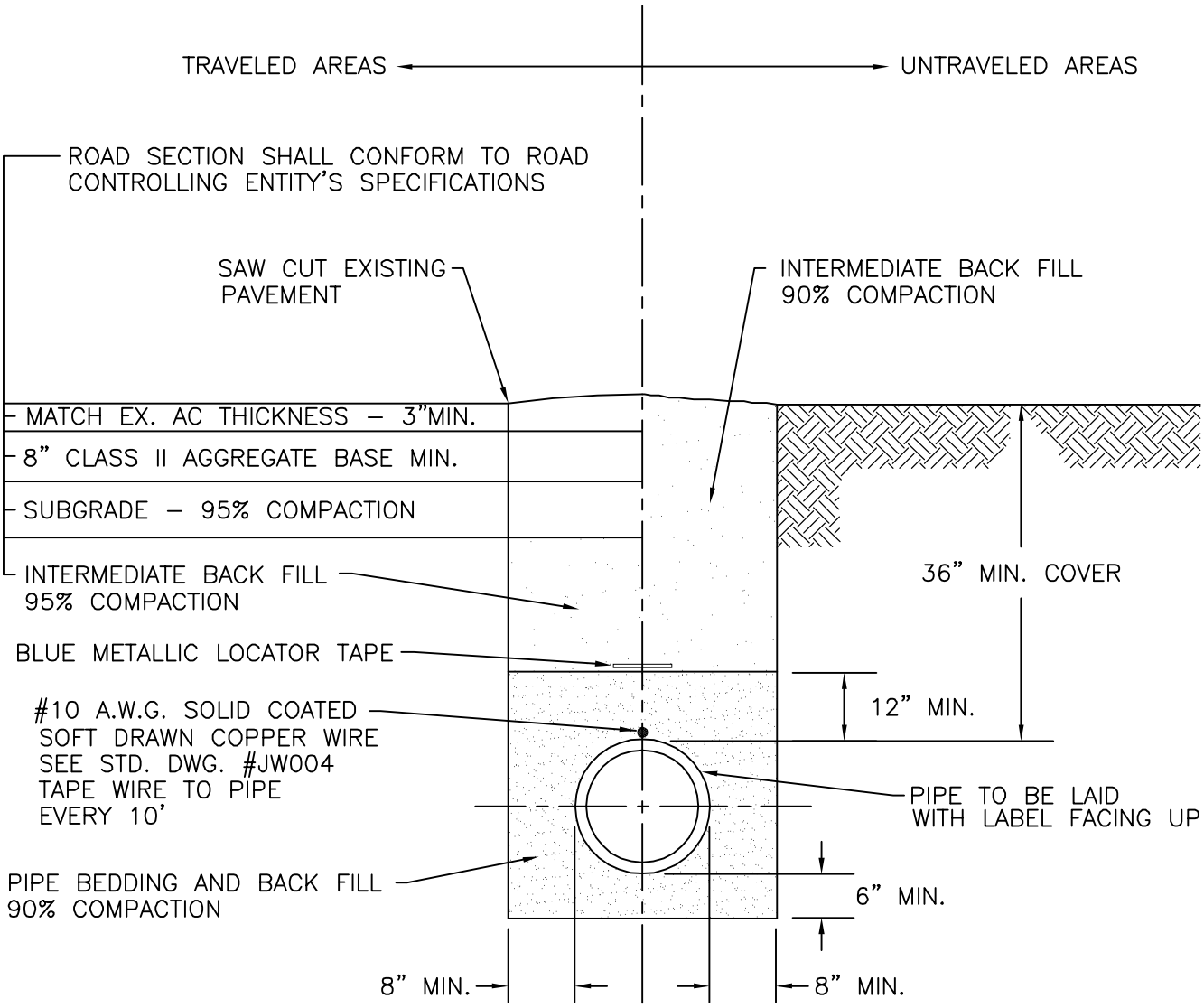

PIPE BEDDING: COMPLY WITH J.W.R. IMPROVEMENT STANDARDS SECTION 21.08.4

INTERMEDIATE BACK FILL: IMPORTED OR NATIVE MATERIAL WITH ALL ROCKS OVER 3" REMOVED AND FREE OF VEGETATIVE MATERIAL. IN EXISTING STREETS BACKFILL SHALL BE CLASS II A.B.

NOTES:

1. MINE TAILINGS ARE UN–ACCEPTABLE FOR ANY TRENCH BACKFILLING.
2. 40" OR GREATER PIPE COVER MUST BE PRE–APPROVED BY J.W.R.
3. BLUE LOCATOR TAPE AT TOP OF SAND TO BE MARKED: "CAUTION – WATER LINE BURIED BELOW".

PIPE TRENCH BEDDING AND BACK FILL			
DRAWN BY: FWW	SCALE: N.T.S.	DRAWING NO.: JW002	REV.:
APPROVED: RTW	DATE: 8/02/10		
JACKSON WATER RESOURCES			

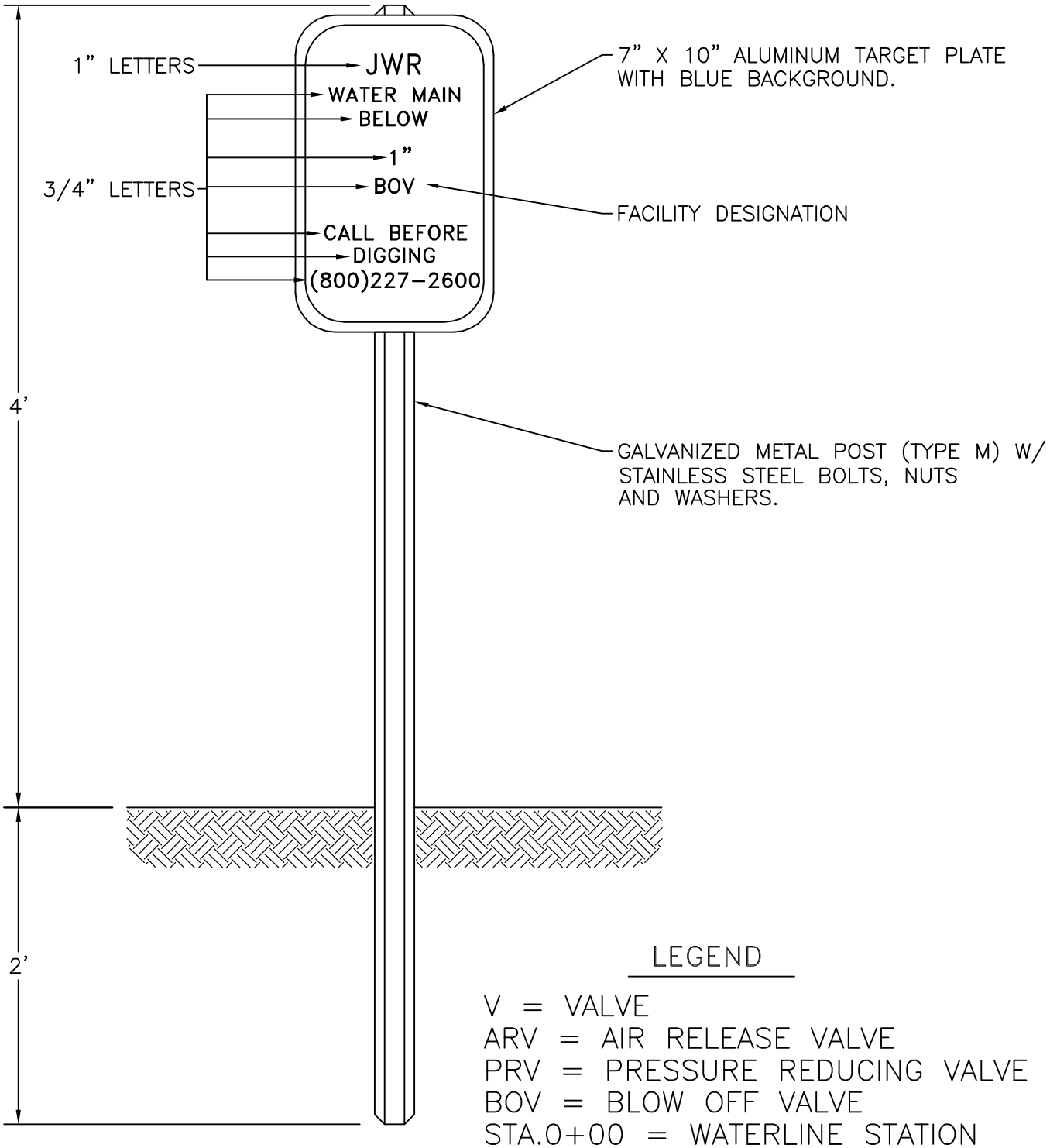

LEGEND

V = VALVE
ARV = AIR RELEASE VALVE
PRV = PRESSURE REDUCING VALVE
BOV = BLOW OFF VALVE
STA.0+00 = WATERLINE STATION
AP = ANGLE POINT

NOTES:

1. LOCATION OF MARKER SHALL BE APPROVED BY CITY ENGINEER BEFORE PLACEMENT.
2. TARGET PLATE & POST SHALL CONFORM TO SECTION 82 OF CALIFORNIA STANDARD SPECIFICATIONS.
3. ALL NUMBERS AND LETTERS SHALL BE STENCILED IN WHITE.

WATER FACILITY MARKER			
DRAWN BY: FWW	SCALE: N.T.S.	DRAWING NO.: JW003	REV.:
APPROVED: RTW	DATE: 1/07/09		
JACKSON WATER RESOURCES			

NOTES:

1. WIRE TO BE CONTINUOUS BETWEEN VALVE BOXES. A CONTINUITY TEST SHALL BE PERFORMED BY CONTRACTOR PRIOR TO FINAL ACCEPTANCE BY CITY.

2. ALL FITTINGS TO BE WRAPPED W/ MINIMUM 6 MIL. POLYETHYLENE FILM.

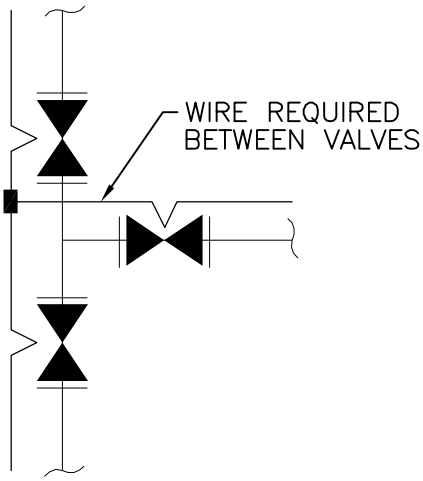

PLAN VIEW

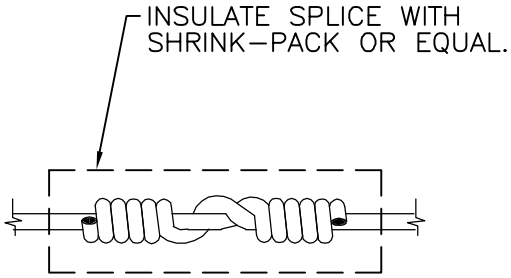

SPLICE DETAIL

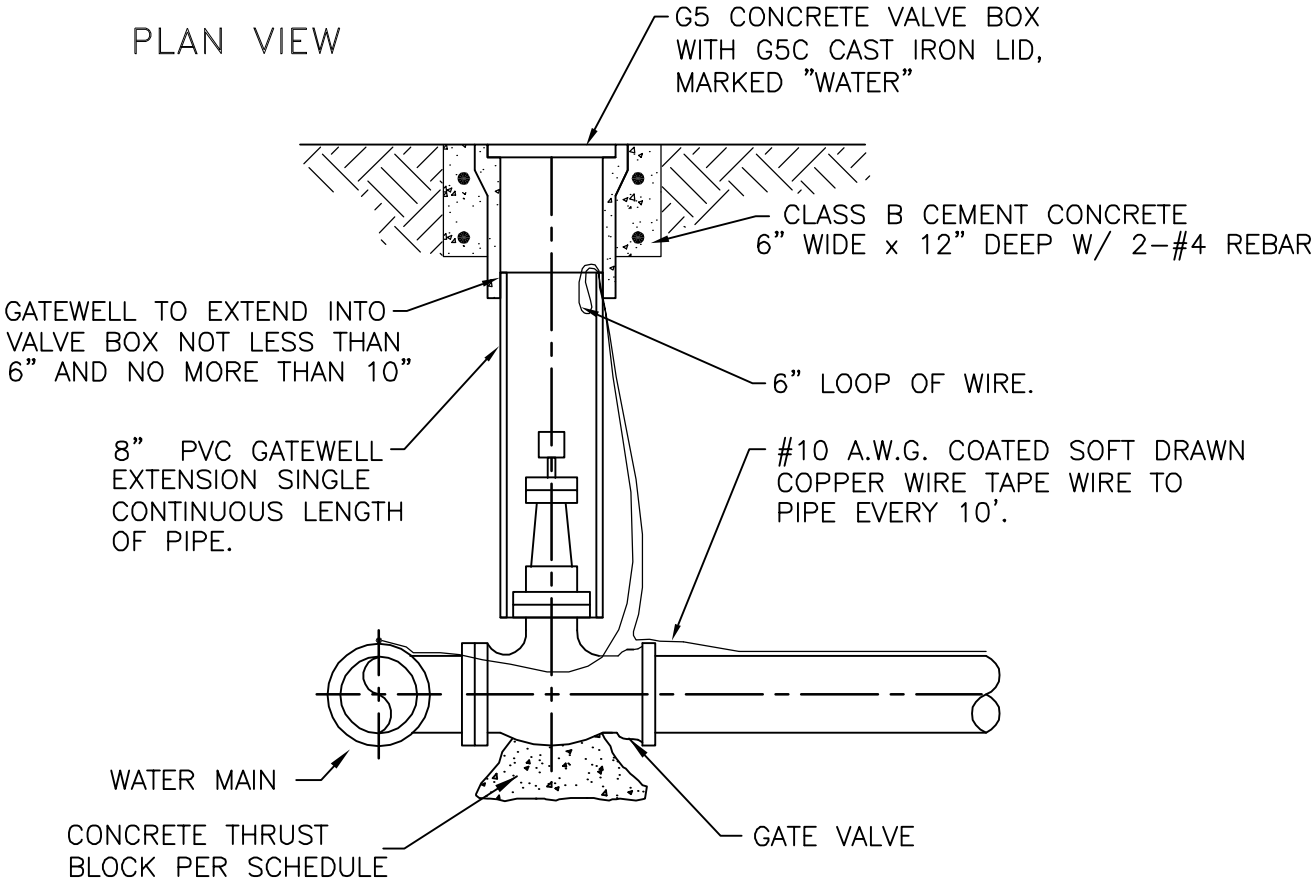

PROFILE
VALVE INSTALLATION

VALVE AND LOCATING WIRE INSTALLATION			
DRAWN BY: FWW	SCALE: N.T.S.	DRAWING NO.: JW004	REV.:
APPROVED: RTW	DATE: 1/07/09		
JACKSON WATER RESOURCES			

NOTES:

1. UNLESS OTHERWISE CALLED OUT SADDLES, BALL VALVES, ETC. SHALL COMPLY WITH JWR STANDARD SPECIFICATIONS. MATCH COMBINATION AIR & VACUUM RELEASE VALVE SIZE.
2. COMBINATION AIR & VACUUM RELEASE VALVE MUST BE PLACED IN BOX SO THAT IT MAY BE REMOVED WITHOUT REMOVING THE BOX.
3. PLACE VENT AT BACK OF SIDEWALK OR OUTSIDE TRAVELED WAY AS DIRECTED BY CITY ENGINEER.
4. VENT SIZE SHALL MATCH COMBINATION AIR & VACUUM RELEASE INLET SIZE.
5. LOCATE COMBINATION AIR & VACUUM RELEASE VALVE AT ALL INTERMEDIATE HIGH POINTS AND AS CALLED FOR ON PLANS.
6. ATTACH RISER TO POST TWO PLACES W/ ANVIL INT'L STRAP #262 OR EQUAL.
7. FOR LANDSCAPE AREAS ONLY: BES C-36 UTILITY BOX OR CHRISTY B-36 STEEL CHECKER LID OR EQUAL MAY BE USED.

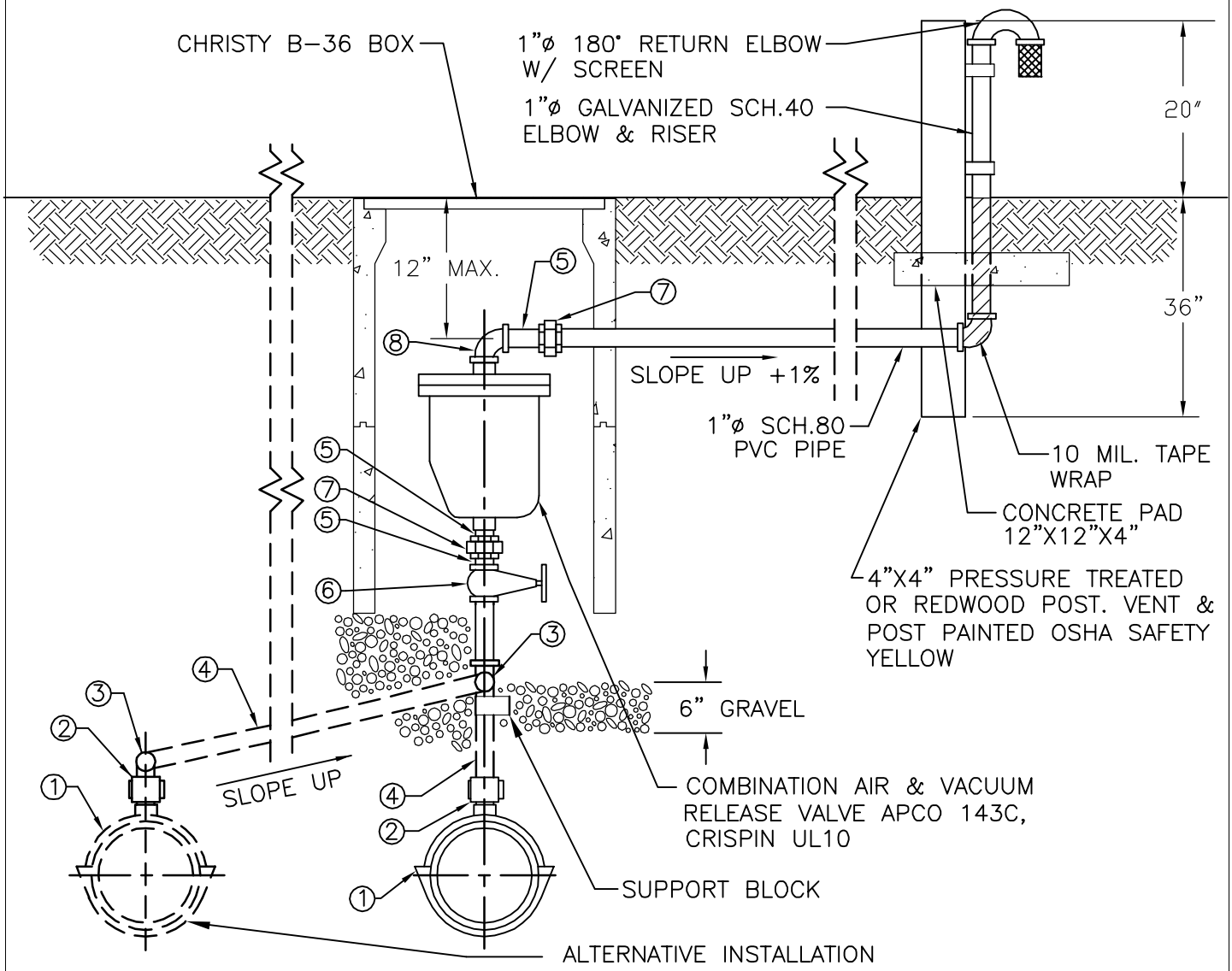

ITEM	DESCRIPTION
1	SERVICE SADDLE
2	CORPORATION STOP
3	90° STREET ELBOWS (SWING JOINT)
4	TYPE K SOFT COPPER PIPE
5	BRASS NIPPLE
6	BALL VALVE
7	1" UNION
8	90° STREET ELBOW

COMBINATION AIR & VACUUM RELEASE VALVE

DRAWN BY: FWW	SCALE: N.T.S.	DRAWING NO.: JW005	REV.:
APPROVED: RTW	DATE: 1-07-09		

JACKSON WATER RESOURCES

NOTES:

1. CONTRACTOR TO SET FIRE HYDRANT TO CORRECT GRADE. HYDRANT LOCATION TO BE BE DETERMINED BY LOCAL FIRE DISTRICT RESPONSIBLE FOR AREA.
2. GUARD POSTS REQ'D. PER CITY STANDARD DETAIL JW007, UNLESS OTHERWISE APPROVED BY CITY ENGINEER.
3. FIRE HYDRANTS MUST BE COVERED (BAGGED) UNTIL AVAILABLE FOR USE.
4. HYDRANT LATERALS IN FILL AREAS SHALL BE DUCTILE IRON WITH RESTRAINED JOINTS.
5. LOCATING WIRE AFTER VALVE BOX IS NOT REQUIRED IF HYDRANT LATERAL IS PERPENDICULAR TO THE MAIN AND LESS THAN 40'.
6. WET BARREL – CLOW 860.

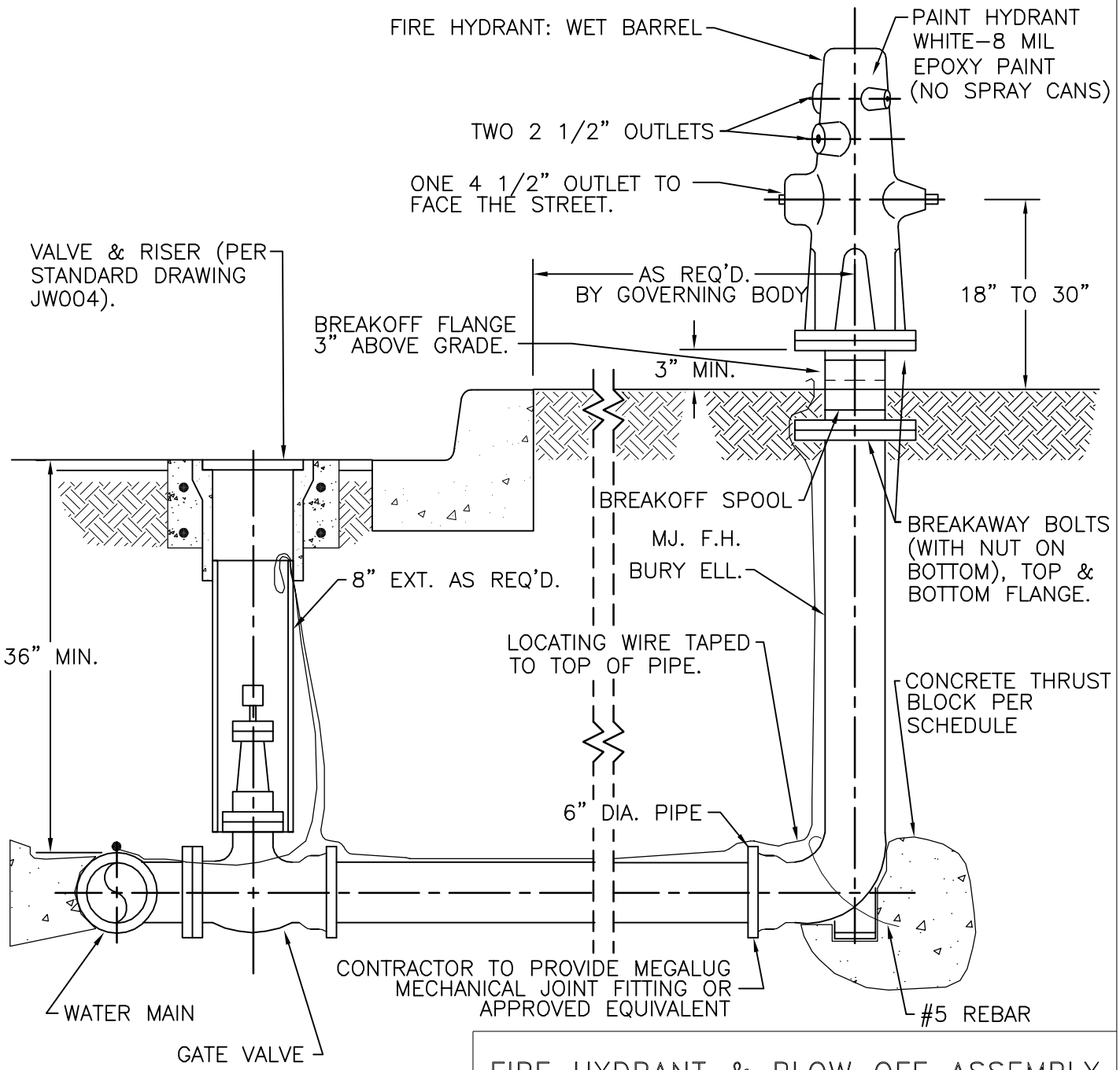

FIRE HYDRANT & BLOW OFF ASSEMBLY			
DRAWN BY: FWW	SCALE: N.T.S.	DRAWING NO.: JW006	REV.:
APPROVED: RTW	DATE: 1/07/09		
JACKSON WATER RESOURCES			

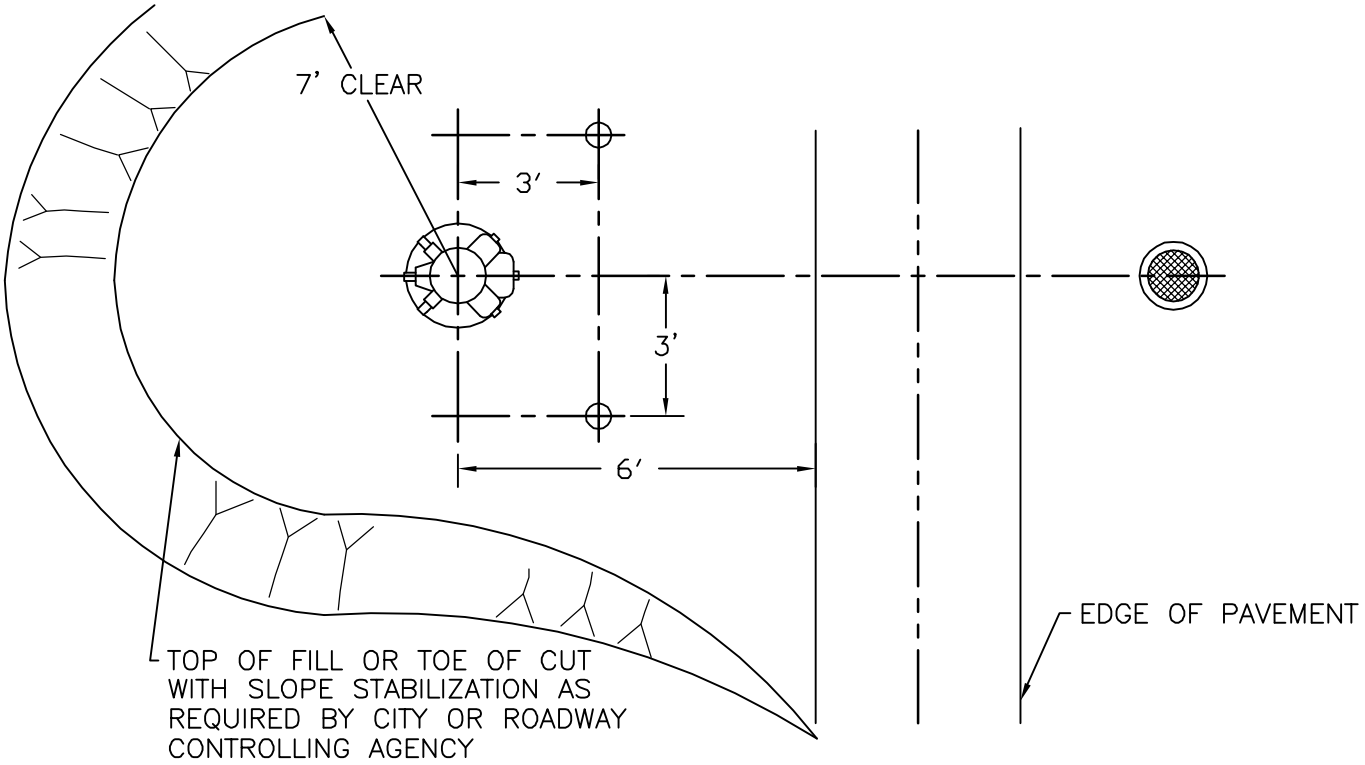

PLAN

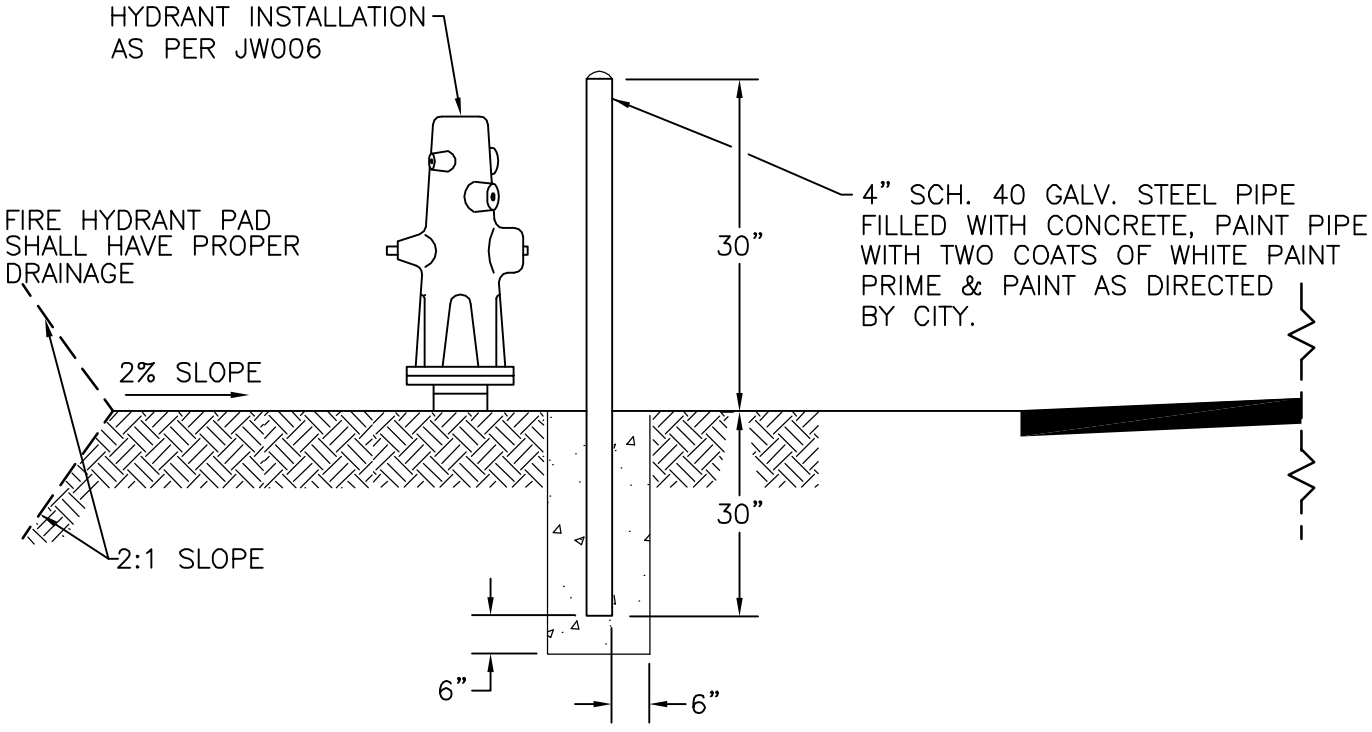

PROFILE

NOTES:

1. TWO GUARD POSTS ARE REQUIRED UNLESS OTHERWISE APPROVED BY CITY ENGINEER.
2. HYDRANT PAD SHALL BE CONSTRUCTED PER ROADWAY EMBANKMENT SPECIFICATIONS AND HAVE A MINIMUM 95% COMPACTION.

FIRE HYDRANT PLAN			
DRAWN BY: FWW	SCALE: N.T.S.	DRAWING NO.: JW007	REV.:
APPROVED: RTW	DATE: 1/07/09		
JACKSON WATER RESOURCES			

THIS PAGE INTENTIONALLY LEFT BLANK FOR FUTURE DRAWING DETAIL

NOTES:

1. PIPING FROM MAIN TO METER SHALL BE 1" POLYETHYLENE CTS WEST FLEX GOLD FOR ALL METER INSTALLATIONS.
2. ALL PIPE CONNECTIONS SHALL BE COMPRESSION TYPE: MUELLER "C-110"; FORD "PACK JOINT"; OR EQUAL.
3. SERVICE METER AND PIPE MUST NOT BE IN DRIVEWAY.
4. METER BOX SHALL BE BES C-16 OR CHRISTY B-16 WITH BES A-16D OR CHRISTY B-16D LID OR EQUAL WITH ROUND HOLE FOR TOUCH READ PORT; LID SHALL BE MARKED "WATER". TRAFFIC LID SHALL BE BES C-16D OR CHRISTY B16-61D OR EQUAL WHERE REQUIRED.
5. DUAL SERVICES SHALL NOT BE PERMITTED. VARIANCES TO METER LOCATION SHALL BE APPROVED BY CITY ENGINEER.
6. BEDDING & BACK FILL REQUIRED ALONG SERVICE LINE PER STANDARD DETAIL DWG. JW002.

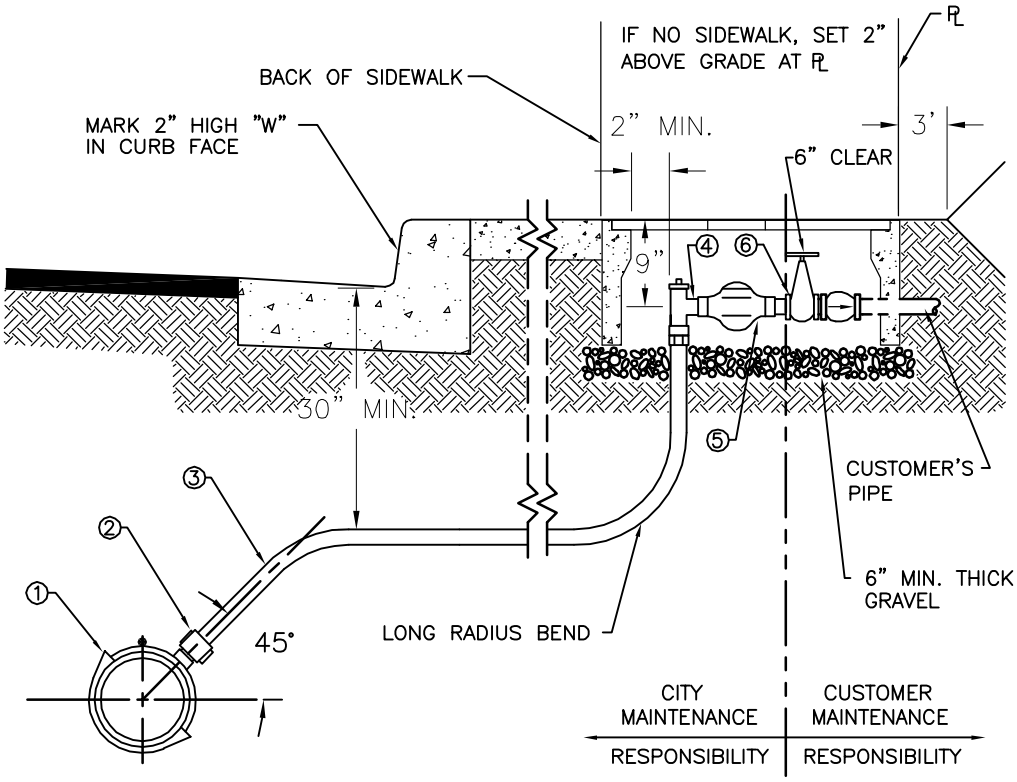

ITEM	DESCRIPTION
1	SERVICE SADDLE
2	CORPORATION STOP
3	POLYETHYLENE CTS
4	ANGLED METER STOP
5	METER-SUPPLIED BY CITY
6	GATE VALVE SUPPLIED BY CITY

STANDARD SERVICE CONNECTION
FOR 5/8"x 3/4", 1", 1 1/2", 2" METERS

DRAWN BY: FWW	SCALE: N.T.S.	DRAWING NO.: JW009	REV.:
APPROVED: RTW	DATE: 1/07/09		

JACKSON WATER RESOURCES

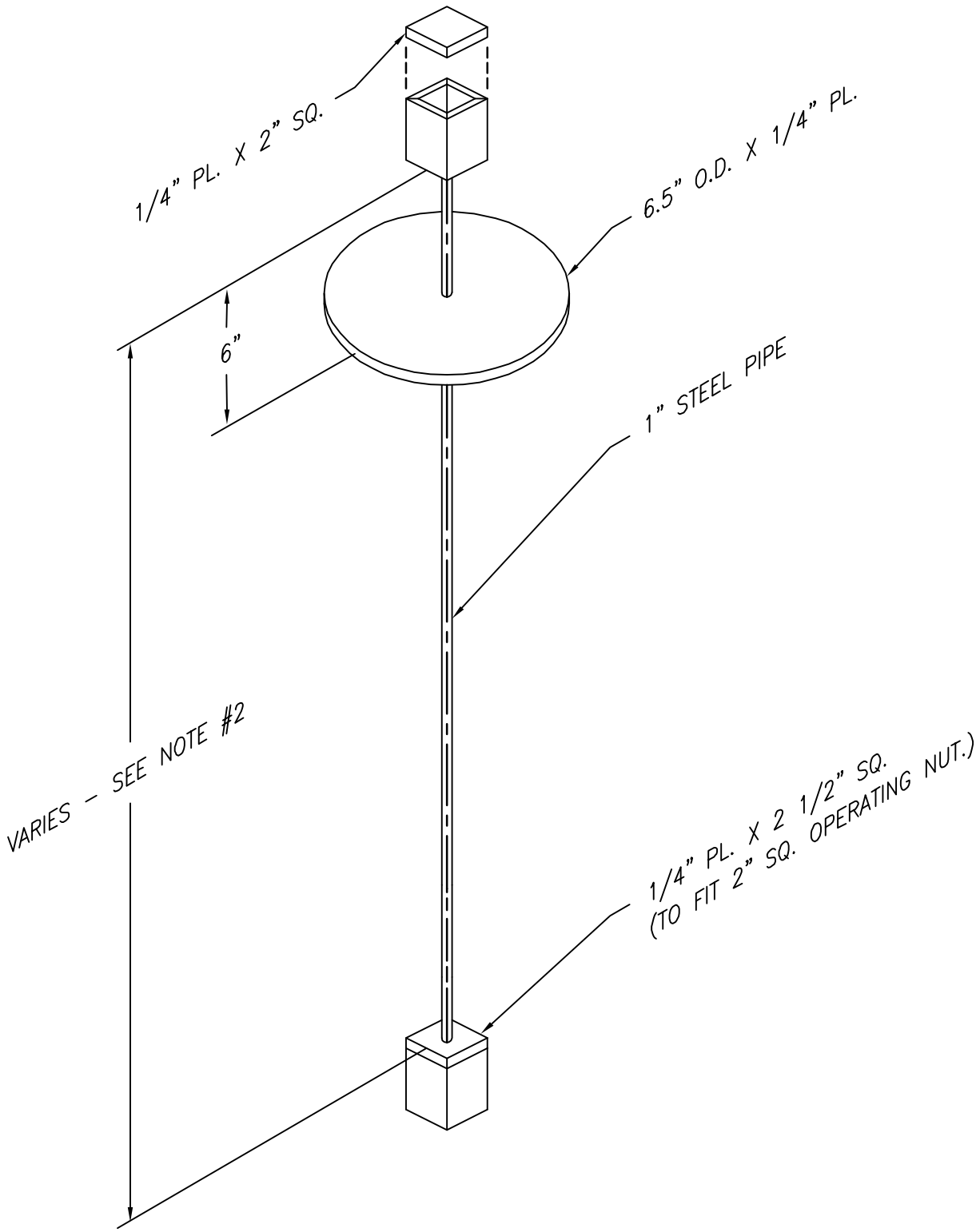

NOTES:

1. REQUIRED WHERE VALVE NUT IS DEEPER THAN 4' BELOW FINISHED GRADE.
2. TOP OF FABRICATED EXTENSION TO BE 24" – 36" FROM FINISHED GRADE.

VALVE OPERATING NUT EXTENSION			
DRAWN BY: FWW	SCALE: N.T.S.	DRAWING NO.: JW010	REV.:
APPROVED: RTW	DATE: 1/07/09		
JACKSON WATER RESOURCES			

NOTES:

1. SPECIAL PIPE SHALL BE DUCTILE IRON PIPE WITH HOT DIP BITUMINOUS COATING OR CLASS 200 PVC (DR 14 PER AWWA C900 OR DR 21 PER AWWA C905).
2. IF SEWER MAIN OR LATERAL IS CUT OR DAMAGED, THE CITY MUST BE NOTIFIED.
3. ALTERATION OF SEWER GRADE WILL BE PERMITTED ONLY AFTER WRITTEN PERMISSION HAS BEEN RECEIVED BY THE CITY.
4. ALL STATE & LOCAL SEWER UTILITY REQUIREMENTS MUST BE MET.
5. ALL CROSSINGS SHALL BE AT 90°, UNLESS OTHERWISE APPROVED BT THE CITY ENGINEER.
6. NON POTABLE FLUID PIPE INCLUDES ALL SEWER MAINS AS WELL AS ANY PIPING CARRYING UNTREATED SEWAGE, PRIMARY OR SECONDARY TREATED SEWAGE, DISINFECTED RECYCLED WATER, HAZARDOUS FLUIDS (FUELS, INDUSTRIAL WASTES, ETC.), RAW WATER AND STORM DRAINAGE.
7. WATER MAIN SHALL BE SPECIAL PIPE IF IT CROSSES WITHIN FOUR (4) INCHES OF ANY OTHER UTILITY.
8. SPECIAL PIPE SHALL BE REQUIRED WITH NO JOINTS FOR WATER PIPE AT ANY DEPTH BELOW THE NON POTABLE FLUID PIPE WITHIN HORIZONTAL SEPARATION SHOWN.

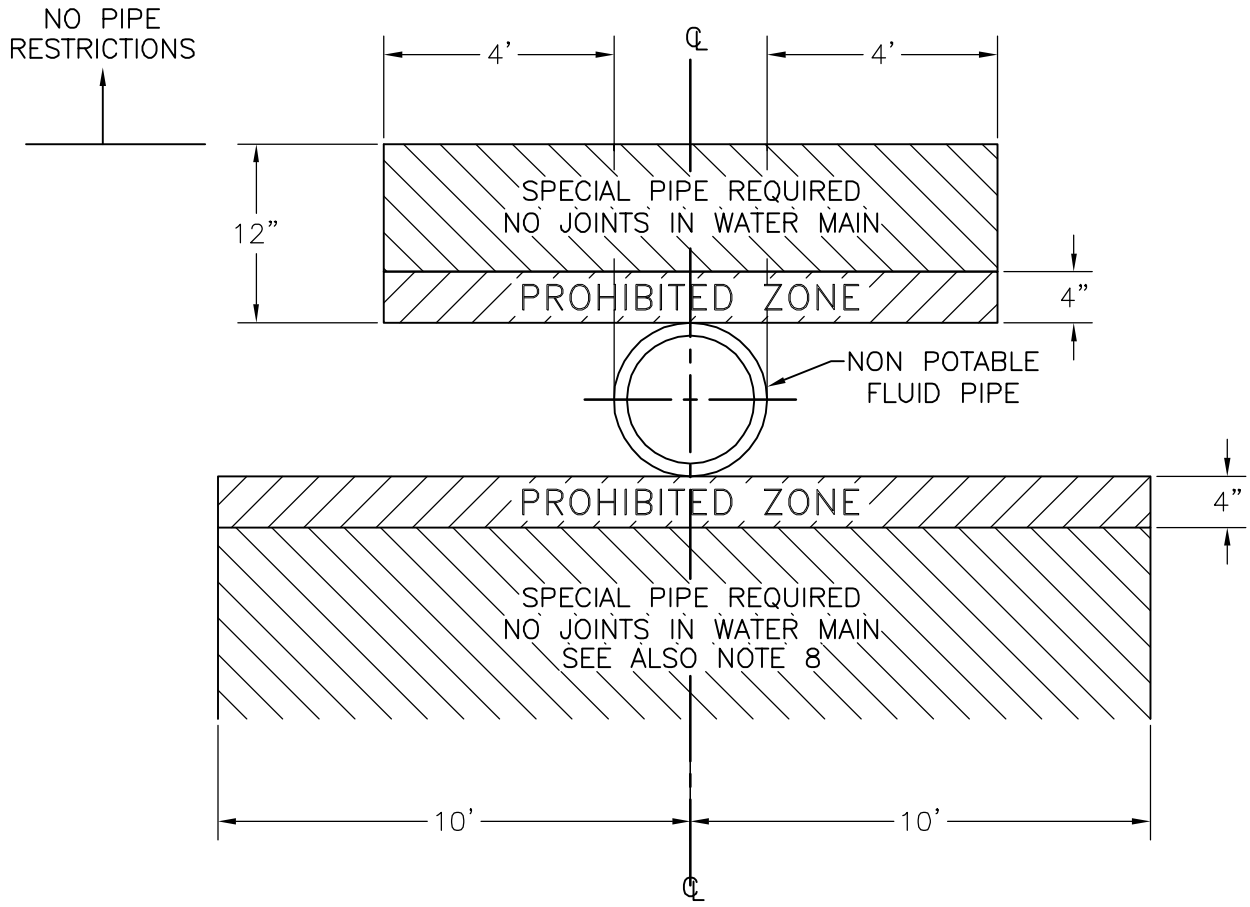

SEWER/WATER LINE CROSSING			
DRAWN BY: FWW	SCALE: N.T.S.	DRAWING NO.: JW011	REV.:
APPROVED: RTW	DATE: 1/07/09		
JACKSON WATER RESOURCES			

NOTES:

1. SPECIAL PIPE SHALL BE DUCTILE IRON PIPE WITH HOT DIP BITUMINOUS COATING OR CLASS 200 PVC (DR 14 PER AWWA C900 OR DR 21 PER AWWA C905).
2. IF SEWER MAIN OR LATERAL IS CUT OR DAMAGED, THE CITY MUST BE NOTIFIED.
3. ALTERATION OF SEWER GRADE WILL BE PERMITTED ONLY AFTER WRITTEN PERMISSION HAS BEEN RECEIVED BY THE CITY.
4. ALL STATE & LOCAL SEWER UTILITY REQUIREMENTS MUST BE MET.
5. NON POTABLE FLUID PIPE INCLUDES ALL SEWER MAINS AS WELL AS ANY PIPING CARRYING UNTREATED SEWAGE, PRIMARY OR SECONDARY TREATED SEWAGE, DISINFECTED RECYCLED WATER, HAZARDOUS FLUIDS (FUELS, INDUSTRIAL WASTES, ETC.), RAW WATER AND STORM DRAINAGE.
6. IF WATER MAIN IS INSTALLED ONE (1) FOOT HIGHER AND WITH TEN (10) FEET HORIZONTAL SEPARATION FROM THE NON POTABLE LINE, NO RESTRICTIONS APPLY.
7. WATER MAIN SHALL BE SPECIAL PIPE IF INSTALLED WITHIN ONE (1) FOOT OF ANY OTHER UTILITY.

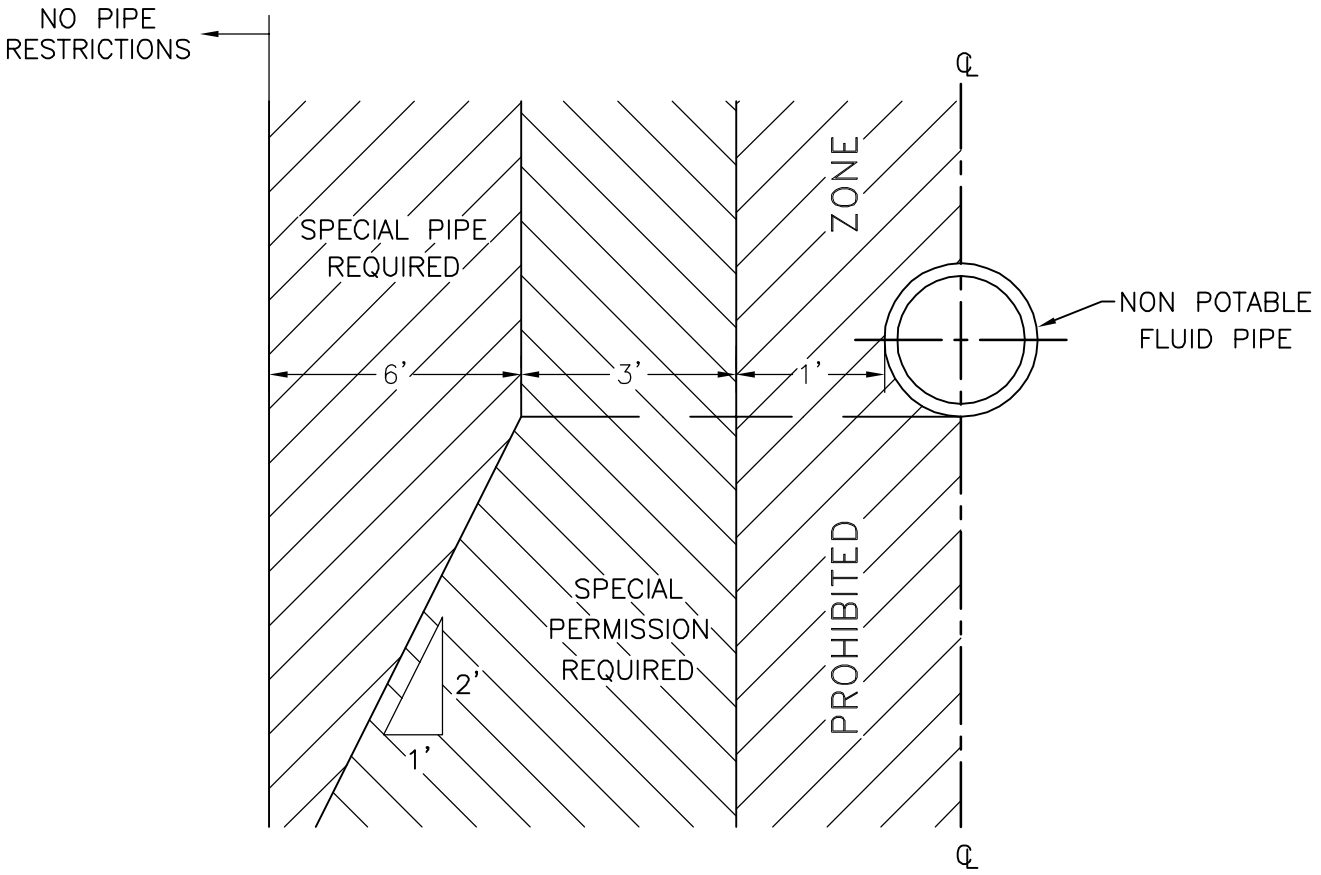

SEWER/WATER LINE PARALLELING			
DRAWN BY: FWW	SCALE: N.T.S.	DRAWING NO.: JW011A	REV.:
APPROVED: RTW	DATE: 1/07/09		
JACKSON WATER RESOURCES			

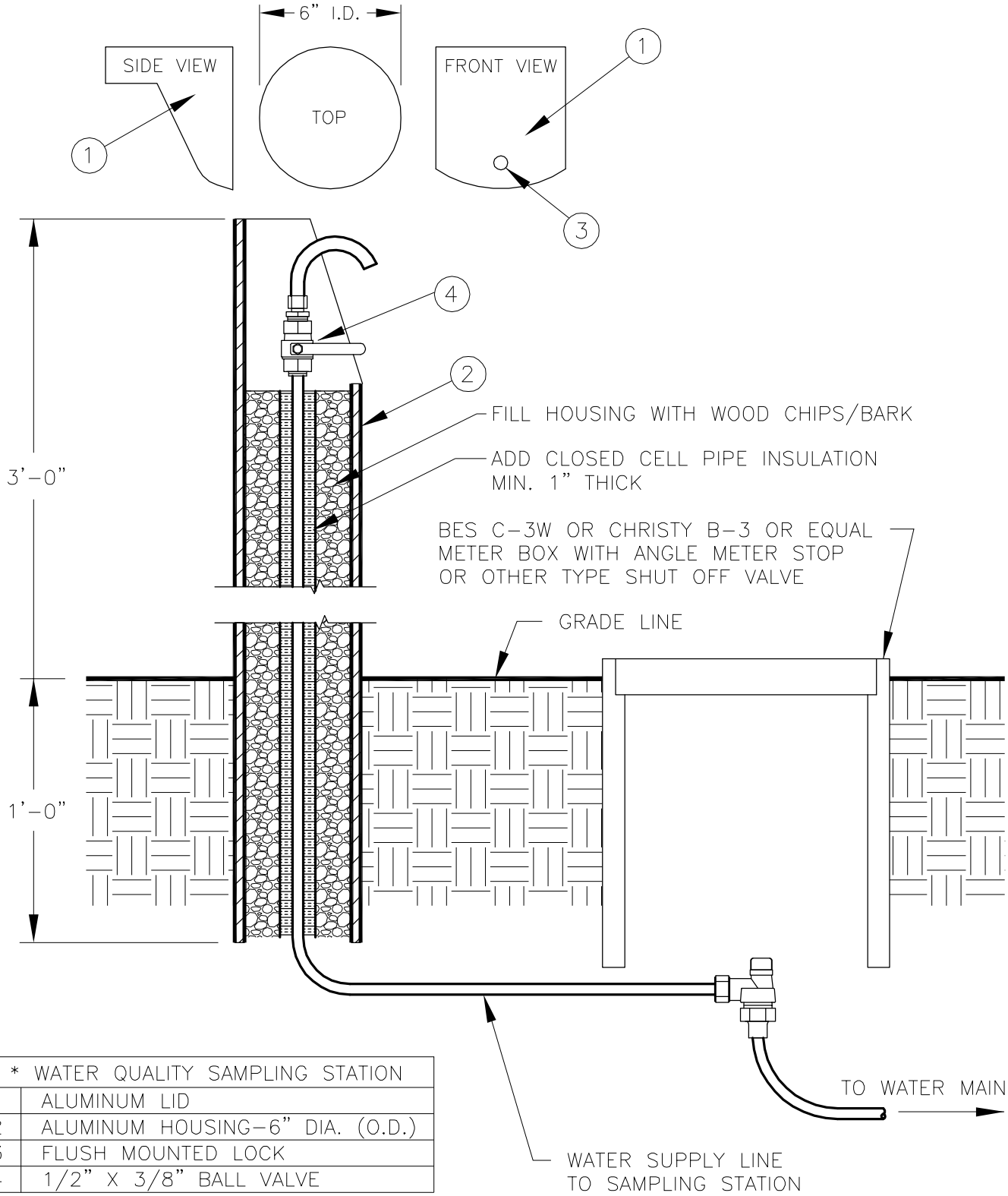

* WATER QUALITY SAMPLING STATION	
1	ALUMINUM LID
2	ALUMINUM HOUSING-6" DIA. (O.D.)
3	FLUSH MOUNTED LOCK
4	1/2" X 3/8" BALL VALVE

* ONLY ITEMS 1 THRU 4 INCLUDED

NOTE:

USE SPECIFIED MANUFACTURER OR EQUAL.

KORALEEN
ENTERPRISES

1340 Loma De Paz, Escondido, CA 92027
Phone 760-743-0407
Fax 760-743-1396

WATER QUALITY SAMPLING STATION

DRAWN BY: FWW	SCALE: N.T.S.	DRAWING NO.: JW012	REV.:
APPROVED: RTW	DATE: 1/07/09		

JACKSON WATER RESOURCES

NOTES:

1. THRUST BLOCK AREAS & VOLUMES GIVEN ARE FOR A TEST PRESSURE OF 150 psi AND A SOIL BEARING PRESSURE OF 2000 lb/sf. INSTALLATIONS USING HIGHER PRESSURES OR LOWER SOIL BEARING PRESSURES WILL REQUIRE ADJUSTMENT OF THRUST BLOCK SIZE; SUBJECT TO APPROVAL BY CITY ENGINEER. CONTRACTOR SHALL CONFIRM SOIL CONDITIONS.
2. THRUST BLOCKS TO BE CONSTRUCTED OF CLASS "B" CONCRETE & SHALL BE POURED AGAINST UNDISTURBED SOIL.
3. WRAP ALL FITTINGS, NUTS, & BOLTS WITH 6 MIL. POLYETHYLENE FILM.
4. JOINTS, FACE OF PLUGS AND NUTS & BOLTS TO BE KEPT CLEAR OF CONCRETE AND MUST BE ABLE TO OPERATE WITHOUT DISTURBING THRUST BLOCK.
5. VERTICAL BENDS SHALL USE RESTRAINED JOINTS AND A FULL LENGTH OF PIPE ON EACH SIDE OF FITTING.
6. #5 REBAR SHALL BE PLACED AS SHOWN, REBAR TO BE SHAPED WITH 90° BEND AT EACH END, AND COATED WITH TWO COATS OF KOPPERS 505 OR EQUAL, 15 MILS EACH COAT.

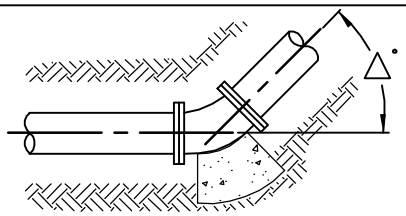

PLAN

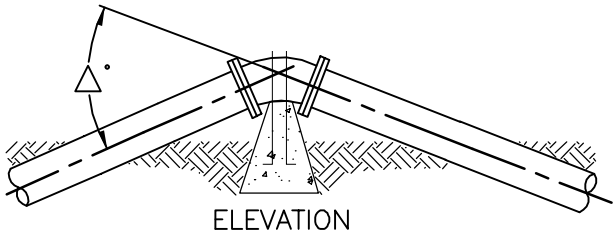

ELEVATION

NOMINAL PIPE DIA. (IN.)	HORIZONTAL THRUST BLOCK BEARING AREA (SQ. FT.)				VERTICAL THRUST BLOCK VOLUME OF CONCRETE (CU. YD.)			
	Δ° =11 1/4°	Δ° =22 1/2°	Δ° =45°	Δ° =90°	Δ° =11 1/4°	Δ° =22 1/2°	Δ° =45°	Δ° =90°
4"	1.0	1.0	1.0	1.8	0.1	0.2	0.5	0.9
6"	1.0	1.1	2.2	4.0	0.3	0.5	1.1	2.0
8"	1.0	2.2	3.8	7.1	0.5	1.0	2.0	3.5
10"	1.5	3.1	6.0	11.1	0.8	1.5	3.0	5.5
12"	2.2	4.4	8.6	16.0	1.1	2.2	4.3	7.9

NOMINAL PIPE DIA. (IN.)	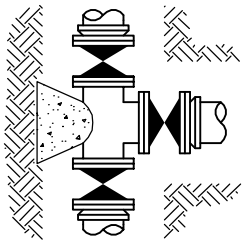 TEE	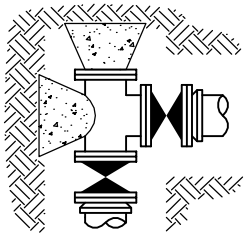 TEE W/ BLD. FLG.	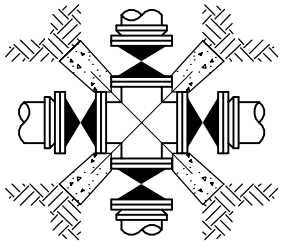 CROSS	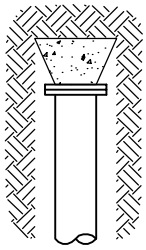 DEAD END	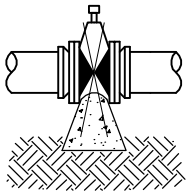 IN LINE VALVE
4"	1.3	1.3	1.3	1.3	1.3
6"	2.8	2.8	2.8	2.8	2.8
8"	5.0	5.0	5.0	5.0	5.0
10"	7.8	7.8	7.8	7.8	7.8
12"	11.3	11.3	11.3	11.3	11.3
EACH HORIZONTAL THRUST BLOCK BEARING AREA (SQ. FT.)					

THRUST BLOCK DETAILS

DRAWN BY: FWW	SCALE: N.T.S.	DRAWING NO.: JW013	REV.:
APPROVED: RTW	DATE: 1/07/09		

JACKSON WATER RESOURCES

NOTES:

1. SKIDS OF CARRIER PIPE SUPPORTS SHALL BE GREASED BEFORE INSTALLATION.
2. SPACING OF CARRIER PIPE SUPPORTS SHALL BE PER MANUFACTURES' RECOMMENDATION OR 9', WHICH EVER IS LESS.
3. CARRIER PIPE SHALL BE TESTED BEFORE SEALING ENDS.
4. BELLS OF CARRIER PIPE SHALL NOT REST ON CASING PIPE.
5. CASING LENGTH & THICKNESS SHALL CONFORM TO CITY STANDARDS OR ROADWAY CONTROLLING ENTITY SPECIFICATIONS WHICH EVER ARE MORE STRINGENT.
6. CARRIER PIPE TO BE DUCTILE IRON PIPE WITH RESTRAINED JOINTS.
7. VALVES SHALL BE LOCATED ON EACH SIDE OF CASING AS DIRECTED BY JWR.

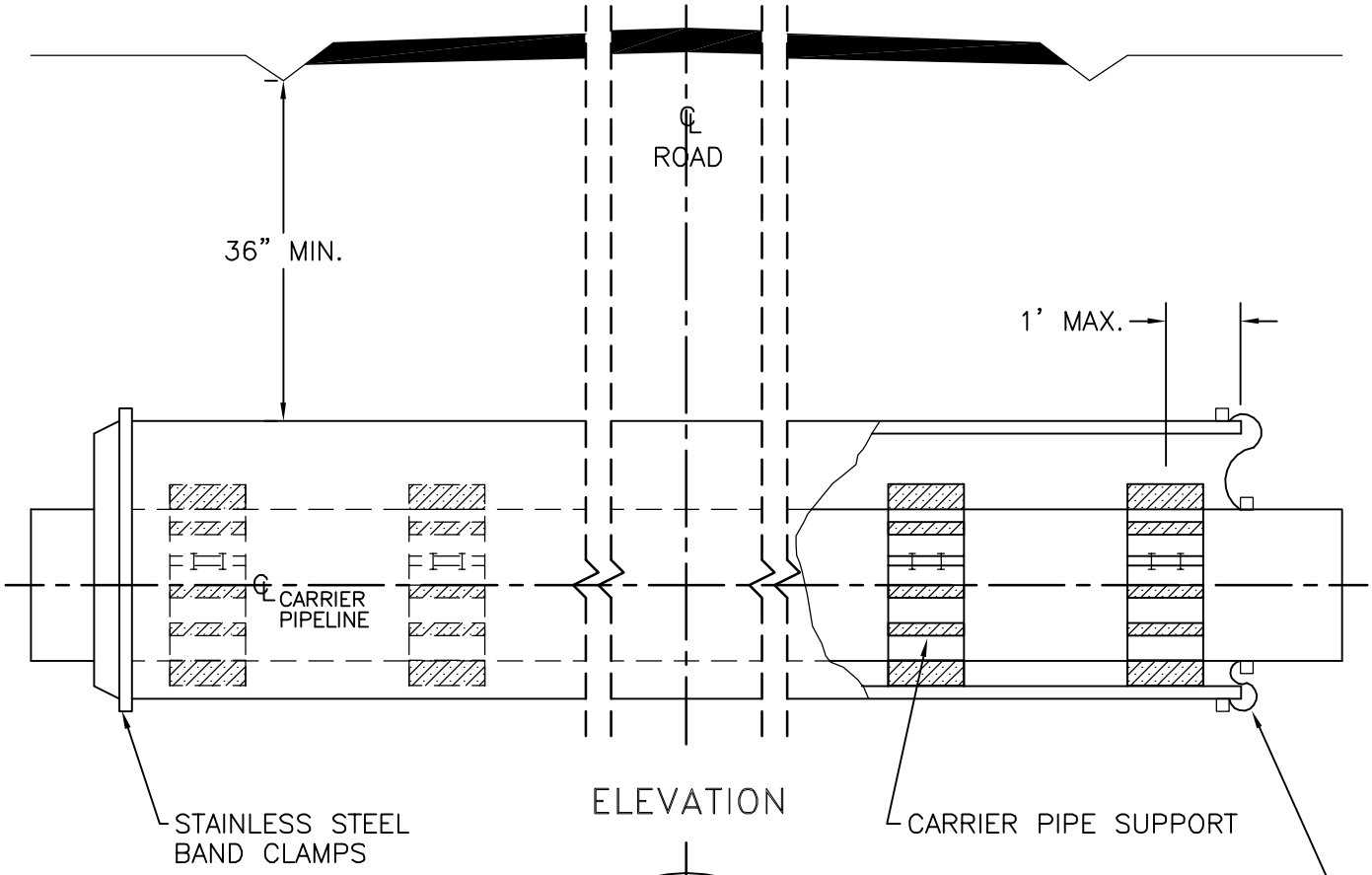

ELEVATION

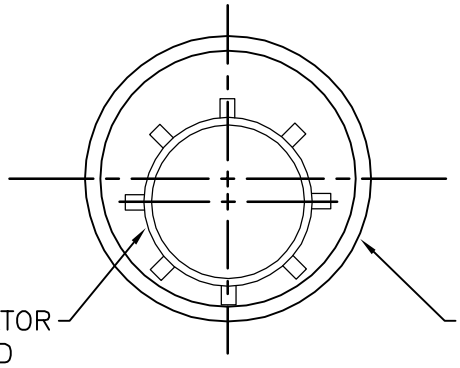

END VIEW

CASING & CARRIER PIPE			
DRAWN BY: FWW	SCALE: N.T.S.	DRAWING NO.: JW014	REV.:
APPROVED: RTW	DATE: 1/07/09		
JACKSON WATER RESOURCES			

NOTES:

1. ALL MECHANICAL BACK FLOW PREVENTION DEVICES SHALL CONFORM TO THE LATEST REVISED CALIFORNIA DEPARTMENT OF HEALTH SERVICES APPROVED LIST FOR CROSS CONNECTION.
2. THE TYPE OF DEVICE (REDUCED PRESSURE PRINCIPAL ASSEMBLY OR DOUBLE CHECK/DETECTOR ASSEMBLY) SHALL BE DETERMINED BY JWR.
3. NO TEES OR OTHER CONNECTIONS ALLOWED ON THE ASSEMBLY.
4. INSTALL BACK FLOW PREVENTION DEVICE AS CLOSE AS PRACTICAL TO THE MAIN.
5. THE CUSTOMER SHALL OWN & MAINTAIN THE BACK FLOW DEVICE AND ALL PIPING FROM MAIN. CUSTOMER SHALL PAY ALL JWR COSTS FOR INSPECTION.
6. VALVE REQUIRED AT MAIN SEE STANDARD DWG. JW004.
7. ALL TESTING TO BE PERFORMED BY THE CUSTOMER. ANY ADDITIONAL RE-TESTING OR ANNUAL TESTING TO BE THE RESPONSIBILITY OF THE CUSTOMER.

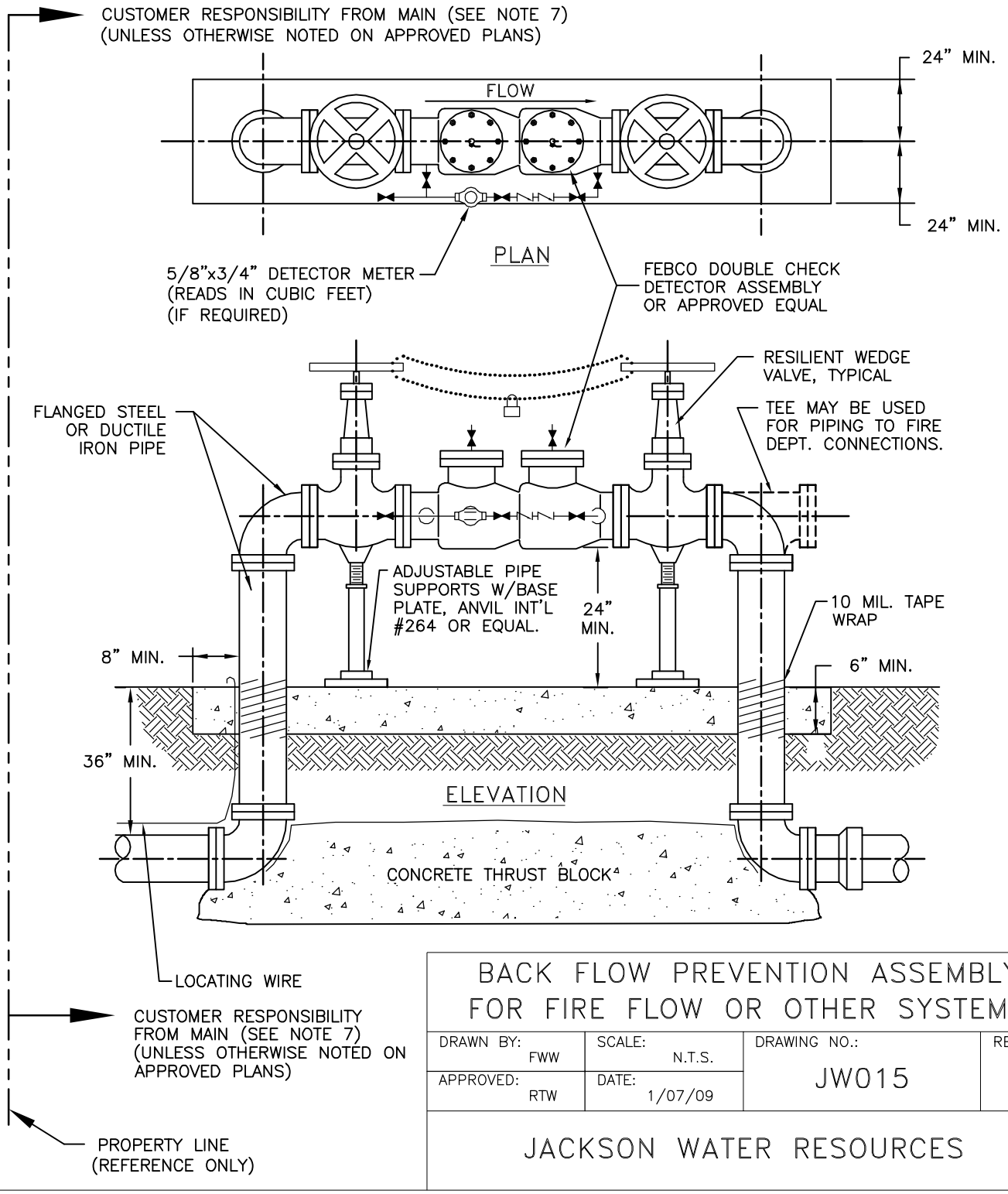

BACK FLOW PREVENTION ASSEMBLY FOR FIRE FLOW OR OTHER SYSTEMS			
DRAWN BY: FWW	SCALE: N.T.S.	DRAWING NO.: JW015	REV.:
APPROVED: RTW	DATE: 1/07/09		
JACKSON WATER RESOURCES			

NOTES:

1. ALL PROPERTY HAVING A SECOND SOURCE OF WATER, SUCH AS A WELL OR RAW IRRIGATION WATER, SHALL HAVE AN APPROVED BACKFLOW PREVENTION ASSEMBLY INSTALLED ON THE PROPERTY SIDE OF AND ADJACENT TO THE WATER METER. WHERE CONSTRUCTION OR EQUIPMENT LOCATION PRESENT SITING PROBLEMS FOR THE ABOVE NOTED ASSEMBLY, A DEVIATION MAY BE GRANTED BY (JWR) PROVIDING SUCH REQUEST IS MADE IN WRITING PRIOR TO INSTALLATION OF THE ASSEMBLY. ON THE SERVICE LINE THERE MUST BE NO OUTLET, TEE, TAP, OR CONNECTION OF ANY SORT TO OR FROM THE SUPPLY PIPELINE BETWEEN THE METER AND THE PROTECTIVE ASSEMBLY.
2. BACK FLOW PREVENTION ASSEMBLY SHALL NOT BE INSTALLED BELOW GRADE.
3. ALL BACK FLOW PREVENTION DEVICES SHALL CONFORM TO THE LATEST REVISED CALIFORNIA DEPARTMENT OF PUBLIC HEALTH'S APPROVED LIST FOR CROSS-CONNECTION.
4. THE CUSTOMER SHALL OWN AND MAINTAIN THE BACK FLOW DEVICE AND PAY ALL COSTS TO INSPECT & TEST THE INSTALLATION.

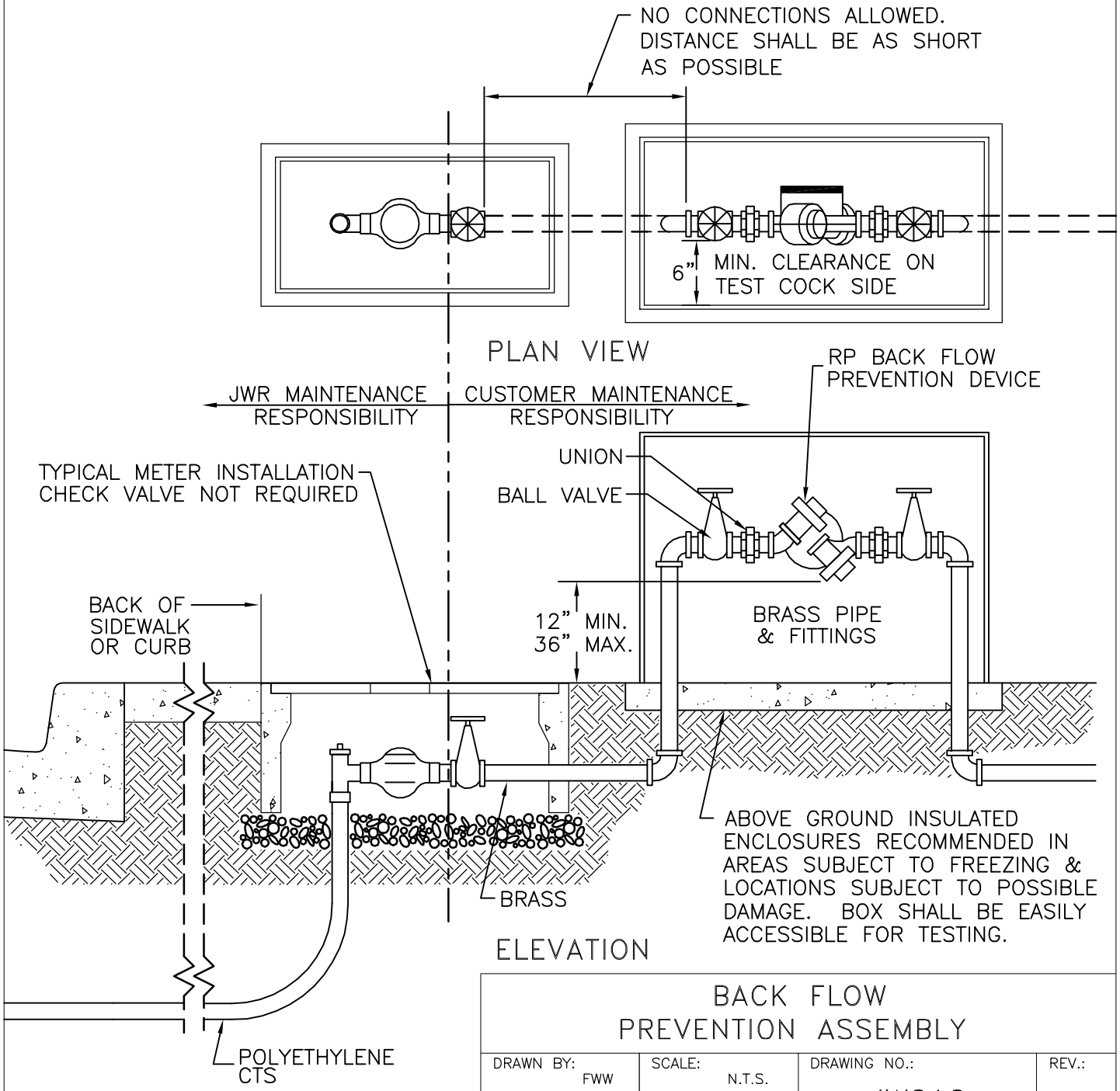

BACK FLOW PREVENTION ASSEMBLY			
DRAWN BY: FWW	SCALE: N.T.S.	DRAWING NO.: JW016	REV.:
APPROVED: RTW	DATE: 1/07/09		
JACKSON WATER RESOURCES			

NOTES:

1. ALL PIPE AND FITTINGS SHALL BE 2" BRONZE, TYPE K SOFT COPPER OR BRASS.
2. BOX TO BE BES C-24 OR CHRISTY B-24 W/ EXTENSION OR APPROVED EQUAL.
3. BEDDING & BACK FILL ALONG BLOW OFF SHALL BE PER STANDARD DWG. JW002.

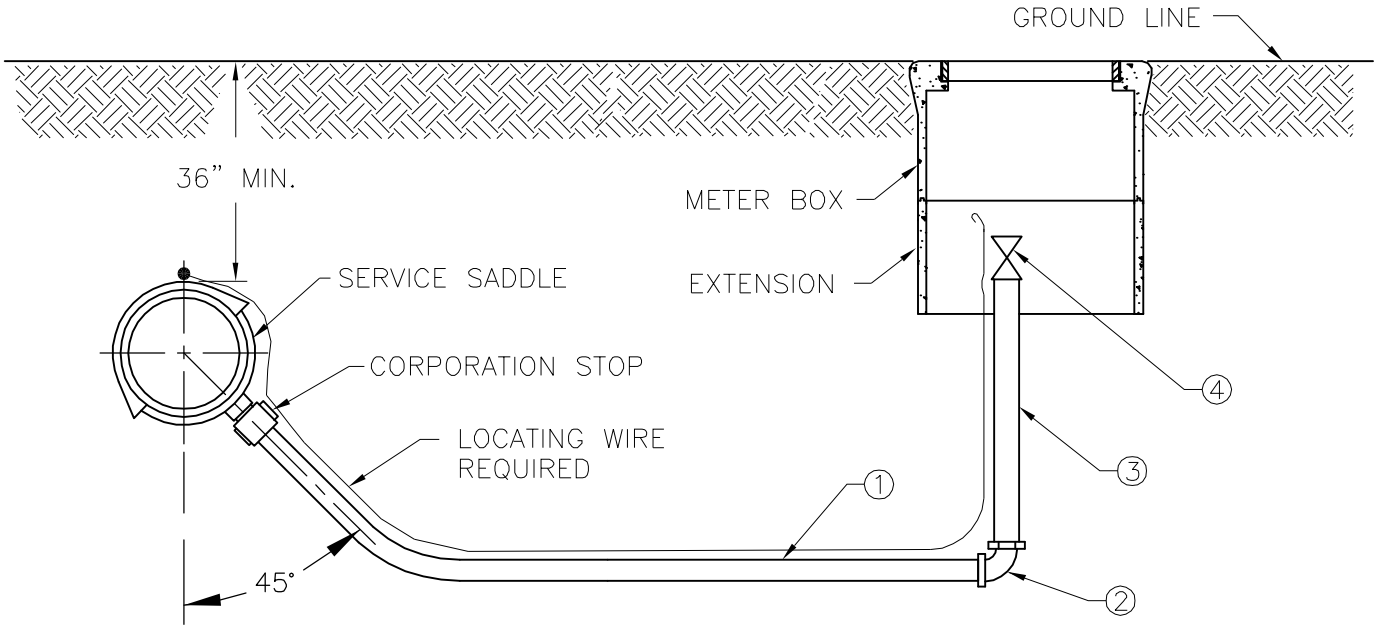

BLOW OFF AT LOW POINTS

TEMPORARY BLOW OFFS ONLY

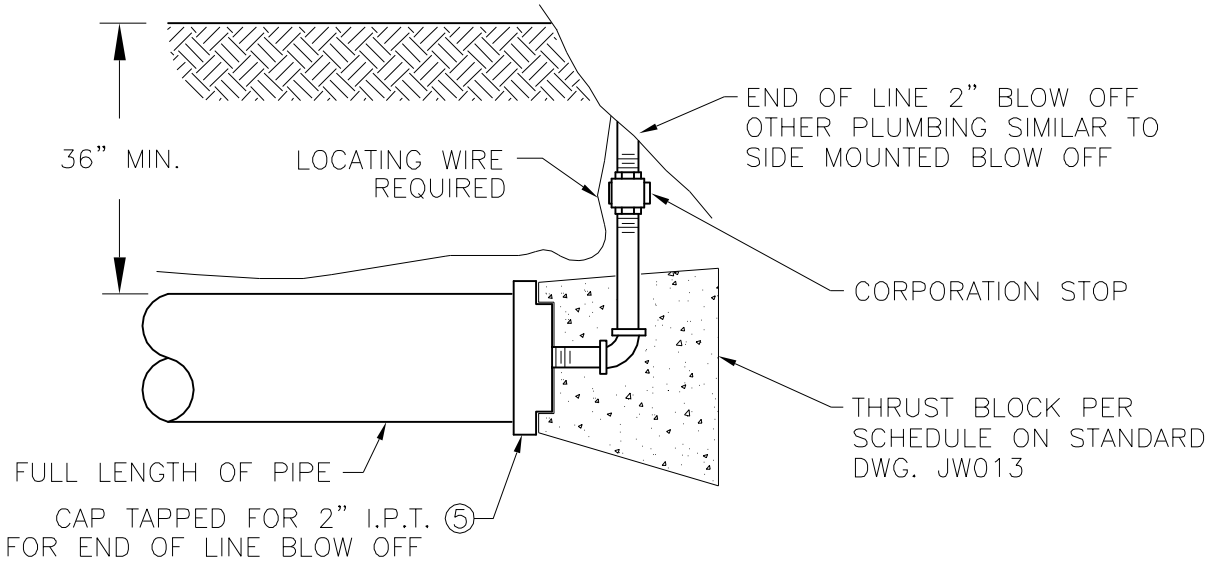

ITEM	DESCRIPTION
1	2" COPPER PIPE
2	90° ELBOW
3	2" BRASS PIPE
4	2" GATE VALVE
5	MJ END CAP

STANDARD BLOW OFF			
DRAWN BY: FWW	SCALE: N.T.S.	DRAWING NO.: JW017	REV.:
APPROVED: RTW	DATE: 1/07/09		
JACKSON WATER RESOURCES			

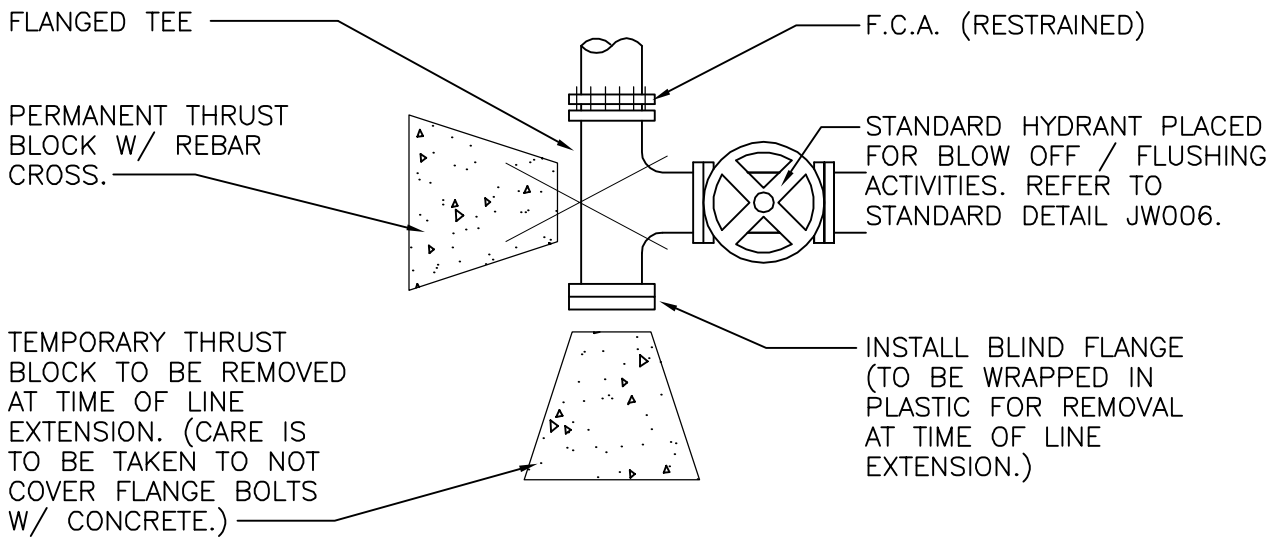

PLAN

NOTE: ALL BOLTED CONNECTIONS TO BE WRAPPED WITH 6 MIL VISQUEEN.

TEMPORARY DEAD END			
DRAWN BY: FWW	SCALE: N.T.S.	DRAWING NO.: JW018	REV.:
APPROVED: RTW	DATE: 1/07/09		
JACKSON WATER RESOURCES			

NOTES:

1. PRESSURE REDUCING STATION DETAIL IS INTENDED TO ILLUSTRATE A TYPICAL LAYOUT OF REQUIRED EQUIPMENT & CLEARANCES. THIS DETAIL IS NOT INTENDED FOR CONSTRUCTION PURPOSES. DIFFERENT PIPING SIZES WILL REQUIRE A SLIGHTLY DIFFERENT LAYOUT. PRV STATION DESIGN SUBJECT TO JWR APPROVAL.
2. PIT SUMP SHALL DRAIN TO DAYLIGHT THROUGH A 4" DIA. DRAIN PIPE OR HAVE SOME OTHER POSITIVE MEANS OF DRAINAGE SUCH AS A SUMP PUMP OR EDUCTOR.
3. IN LINE VALVES SHALL BE LOCATED WITHIN 20' OF THE PRV STATION.
4. ALL EXPOSED PIPE & FITTINGS SHALL BE COATED WITH 8 MIL. EPOXY PAINT.

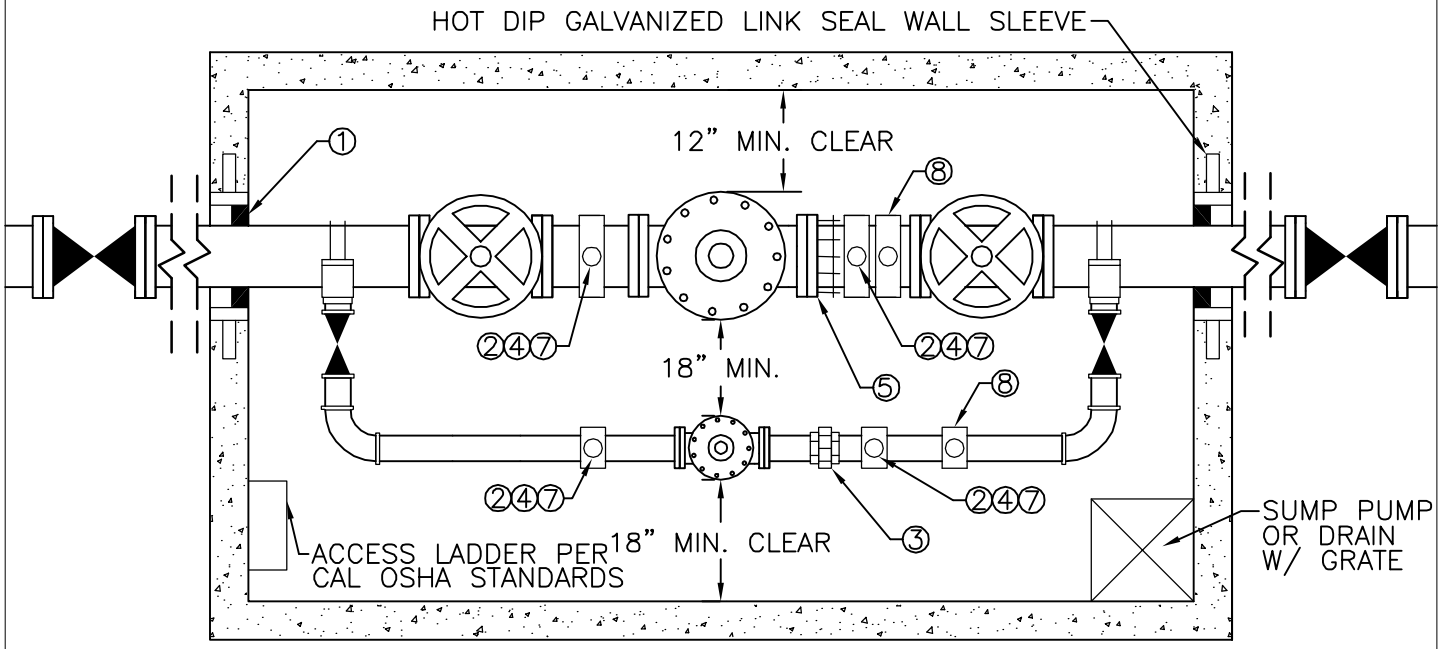

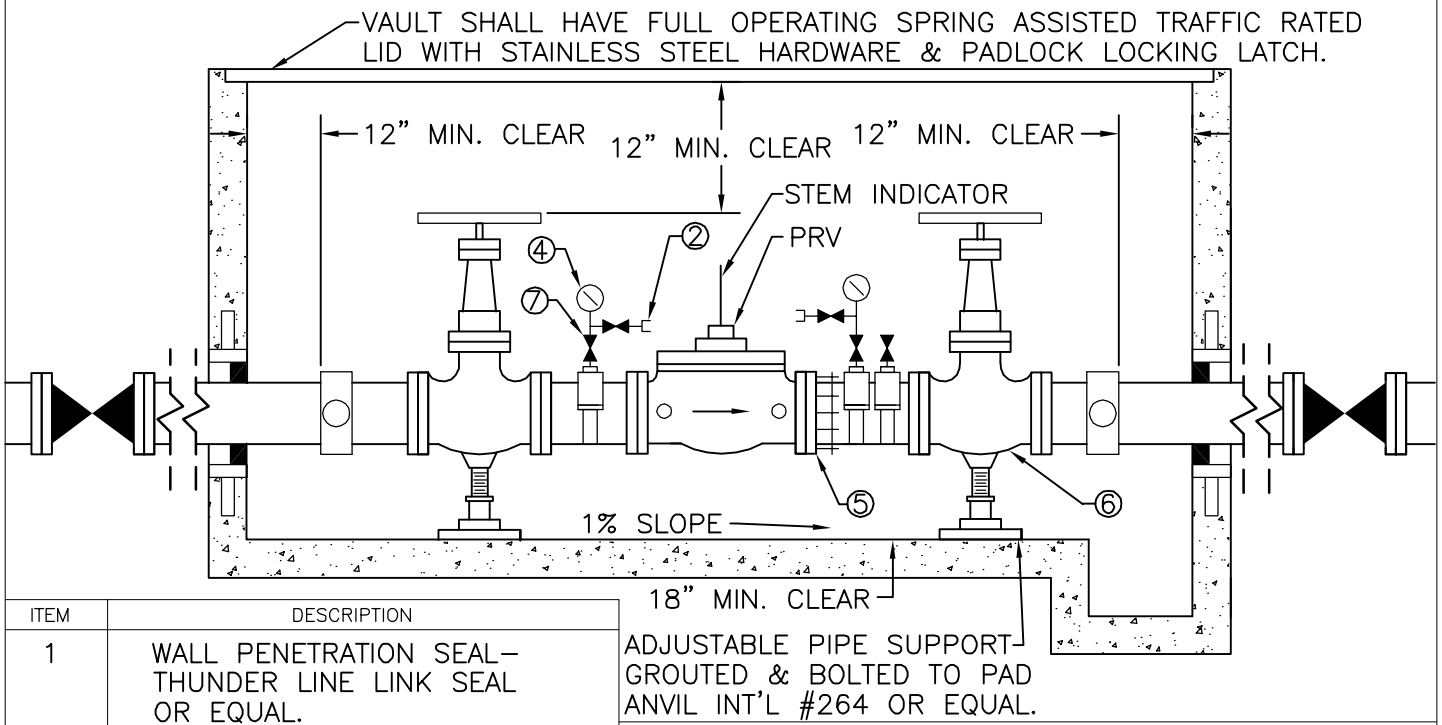

ITEM	DESCRIPTION
1	WALL PENETRATION SEAL– THUNDER LINE LINK SEAL OR EQUAL.
2	1/2" HOSE BIB
3	UNION
4	PRESSURE INDICATOR
5	FLANGE COUPLING ADAPTER
6	HAND WHEEL OPERATED FLANGED GATE VALVE
7	BALL VALVE
8	2" SADDLE WITH GATE VALVE

PRESSURE REDUCING STATION LAYOUT

DRAWN BY: FWW	SCALE: N.T.S.	DRAWING NO.: JW019	REV.:
APPROVED: RTW	DATE: 1/07/09		

JACKSON WATER RESOURCES